COMMON

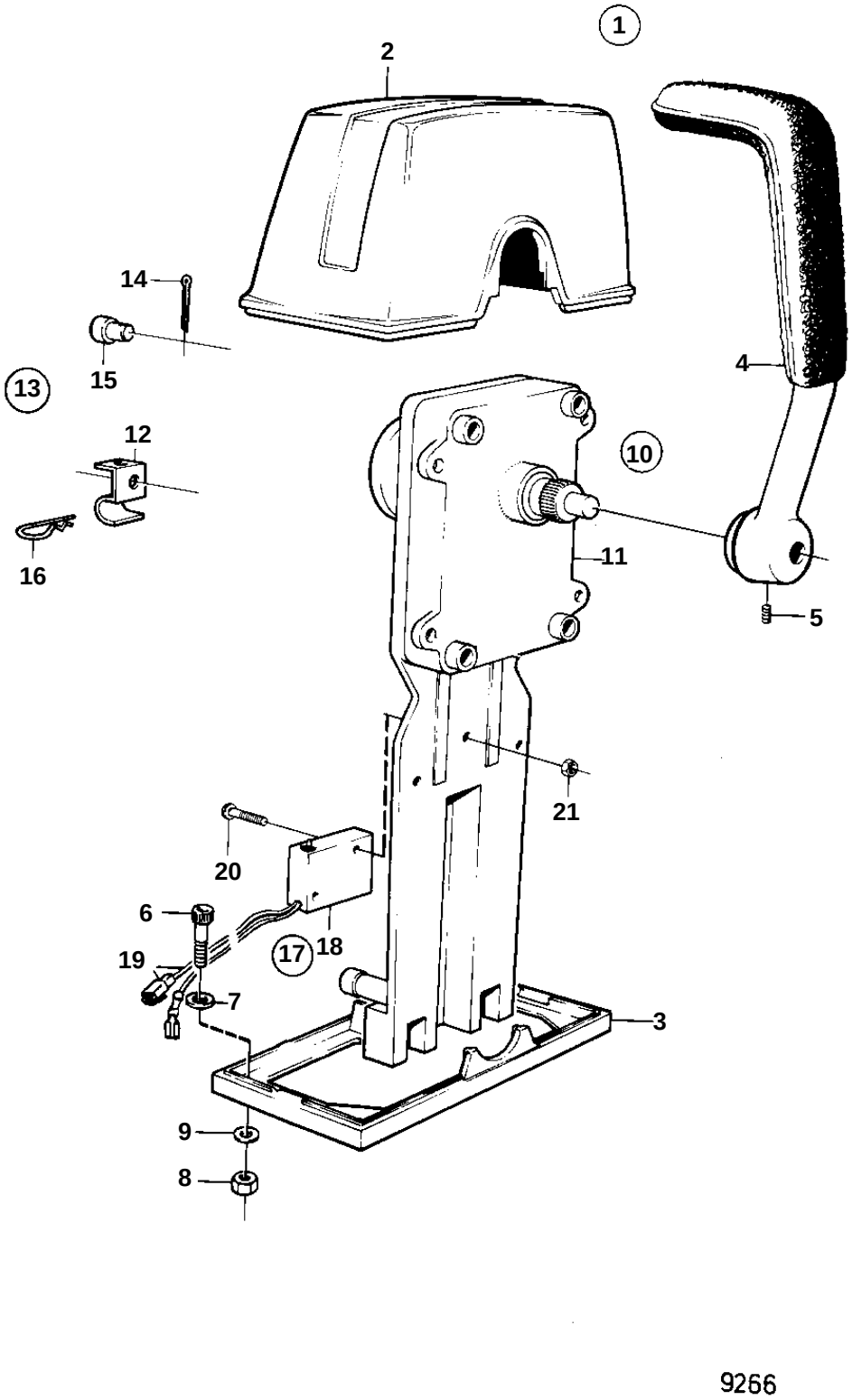

COMMON

REF	PART NO.	QTY	DESCRIPTION		NOTES
1	851602	1	Mounting kit		For single installation.
2		1	· Cover		(839472)
3	839474	1	· Plate		
4	839475	1	· Lever		
5	839693	1	· Lock screw		
6	947671	4	· Allen head screw		
7	940090	2	· Washer		
8	955780	4	· Nut		
9	960138	4	· Washer		
10	851600	1	Control		
11		1	· Control mechanism		
12	853423	1	· Retainer		
13		1	· Connector kit		
14	17253	2	· · Cotter pin		
15	839638	2	· · Cube		
16	852924	1	· · Clip		
17	855352	1	Neutral posit contac		
18	850200	1	· Switch		
19		X	· · Cables and terminals		SE GROUP 30
20	946177	2	· Screw		
21	947536	2	· Nut		