COMMON

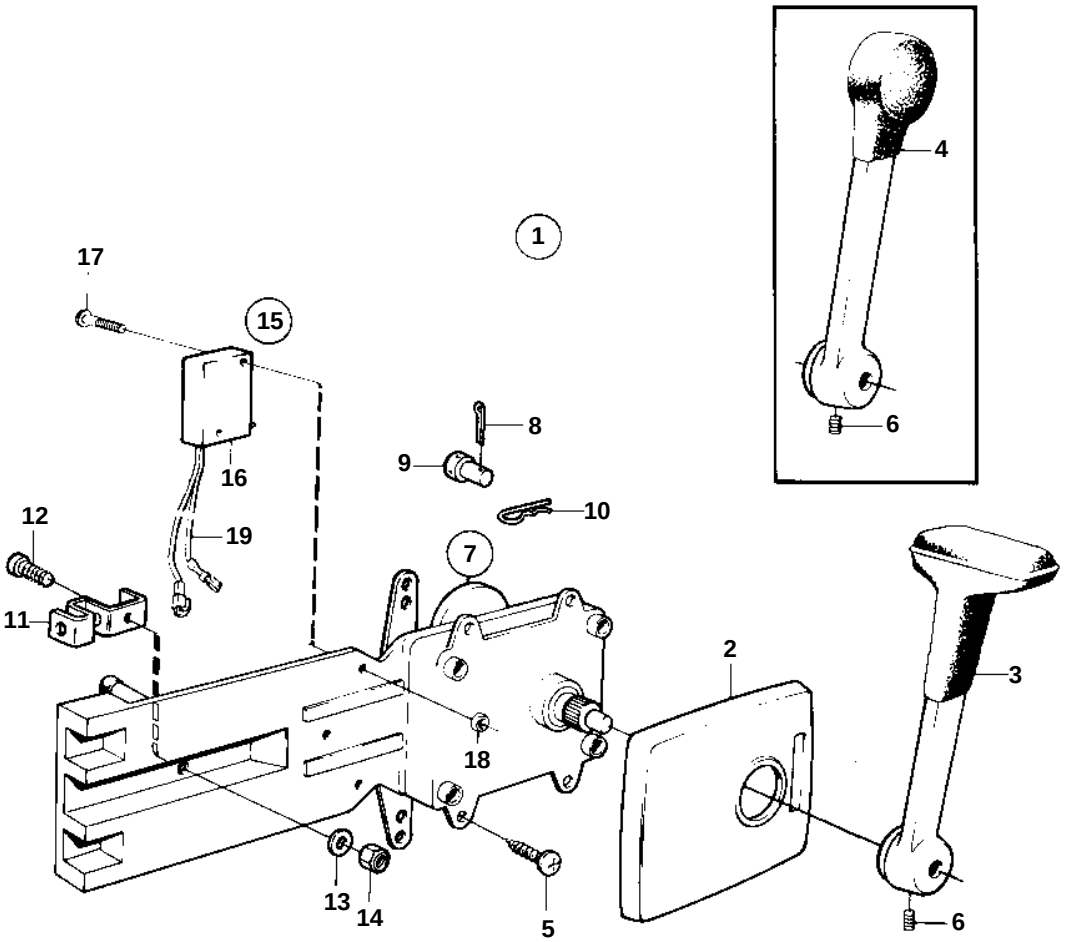

COMMON

REF	PART NO.	QTY	DESCRIPTION		SEE SEC.
1	851605	1	Mounting kit		
2	1140048	1	· Cover		
4	839521	1	· Lever		
5	955142	4	· Screw		
6	839693	1	· Lock screw		
7	851601	1	Control		
8	17253	2	· Cotter pin		
9	839638	2	· Cube		
10	852924	1	· Clip		
11	853423	1	· Retainer		
12	839664	1	· Screw		
13	940275	1	· Washer		
14	946435	1	· Lock nut		
15	855352	1	Neutral posit contac		
16	850200	1	· Switch		
17	946177	2	· Screw		
18	947536	2	· Nut		
19		X	· Cables and terminals		124