TAMD41A

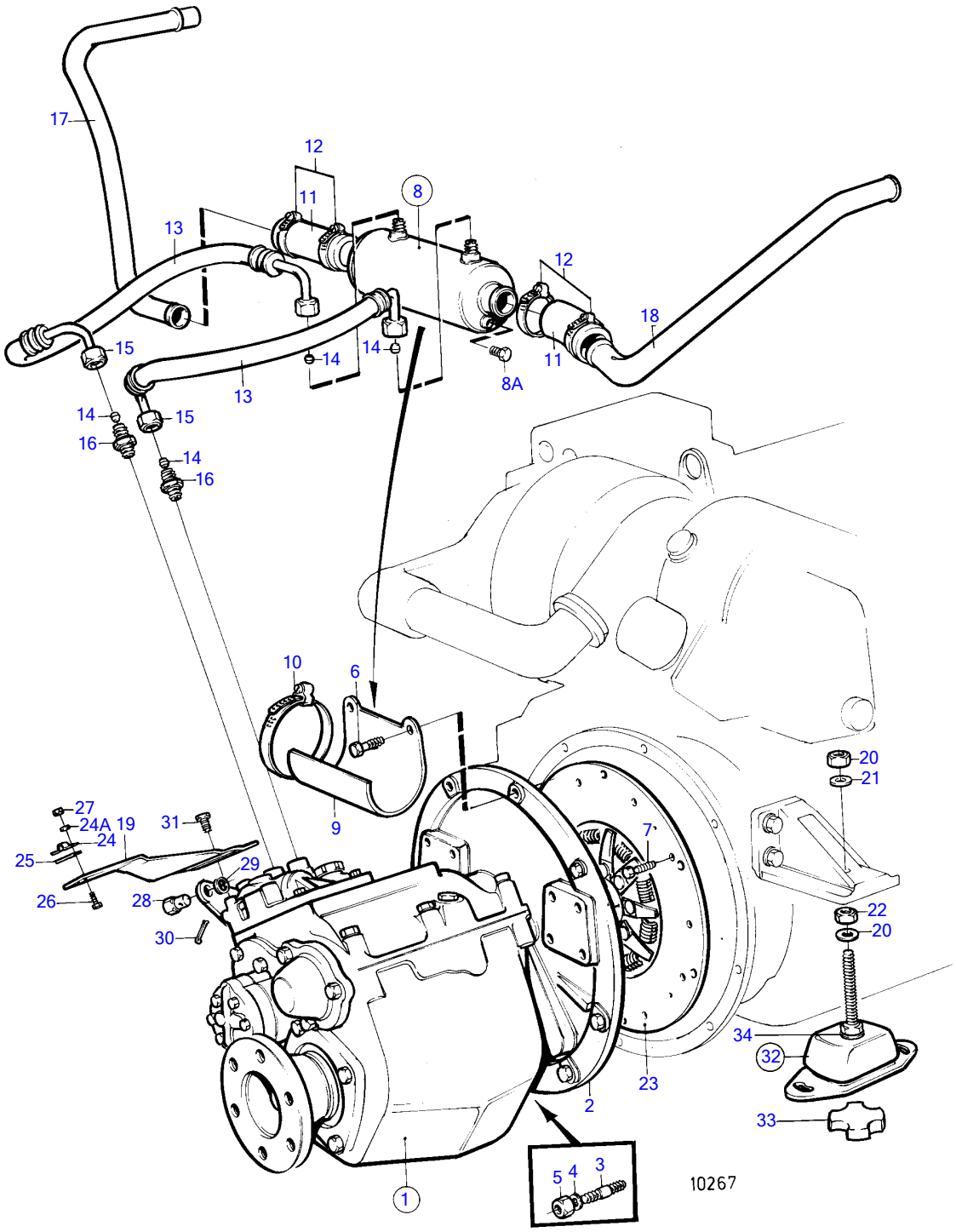
17
12
11
8
13
12
18
15
14
14
11
8A
13
14
15
16
14
16
10
6
20
21
27
24A
19
31
24
9
7
25
29
26
28
22
20
30
34
32
23
2
33
5
4
3
1
10267

TAMD41A

REF	PART NO.	QTY	DESCRIPTION	SEE SEC.	NOTES
1		1	PRM401		Ratio 2:1,3:1,4:1
		1	PRM402		Ratio 2:1,3:1,4:1
2		1	cover		PRM
3	924075	3	Stud		
4	960148	3	Washer		
5	955783	3	Hexagon nut		
6	946472	8	Flange screw		
7	946173	6	Flange screw		
8	855756	1	Oil cooler		(841172)
8A	180759	1	・Plug		
9	(858618)	1	Bracket		Obsolete part
10	961674	2	Hose clamp		
11	949315	2	Rubber hose		L=60mm
12	961669	4	Hose clamp		
13	841171	2	Hose assembly		
14	956970	4	Ferrule		
15	956984	4	Fitting nut		
16	941750	2	Nipple		
17	(859193)	1	Coolant pipe		Obsolete part
18	858616	1	Coolant pipe		
19	858366	1	Bracket		
20	955805	4	Hexagon nut		
21	941912	2	Spring washer		
22	191940	2	Washer		
23	858941	1	Absorber		
24	21471054	1	Bracket		
24A	940090	2	Washer		
25	819068	1	Washer		
26	955246	2	Hexagon screw		
27	946577	2	Lock nut		
28	833133	1	Cube		
29	955892	2	Washer		
30	17276	1	Split pin		
31		2	screw		
32	858160	2	Rubber cushion		
			Bulletin 44-26	44-26-EN	Reinforced Rubber Cushion
33	843299	2	・Rubber disc		
34	955900	2	・Washer		