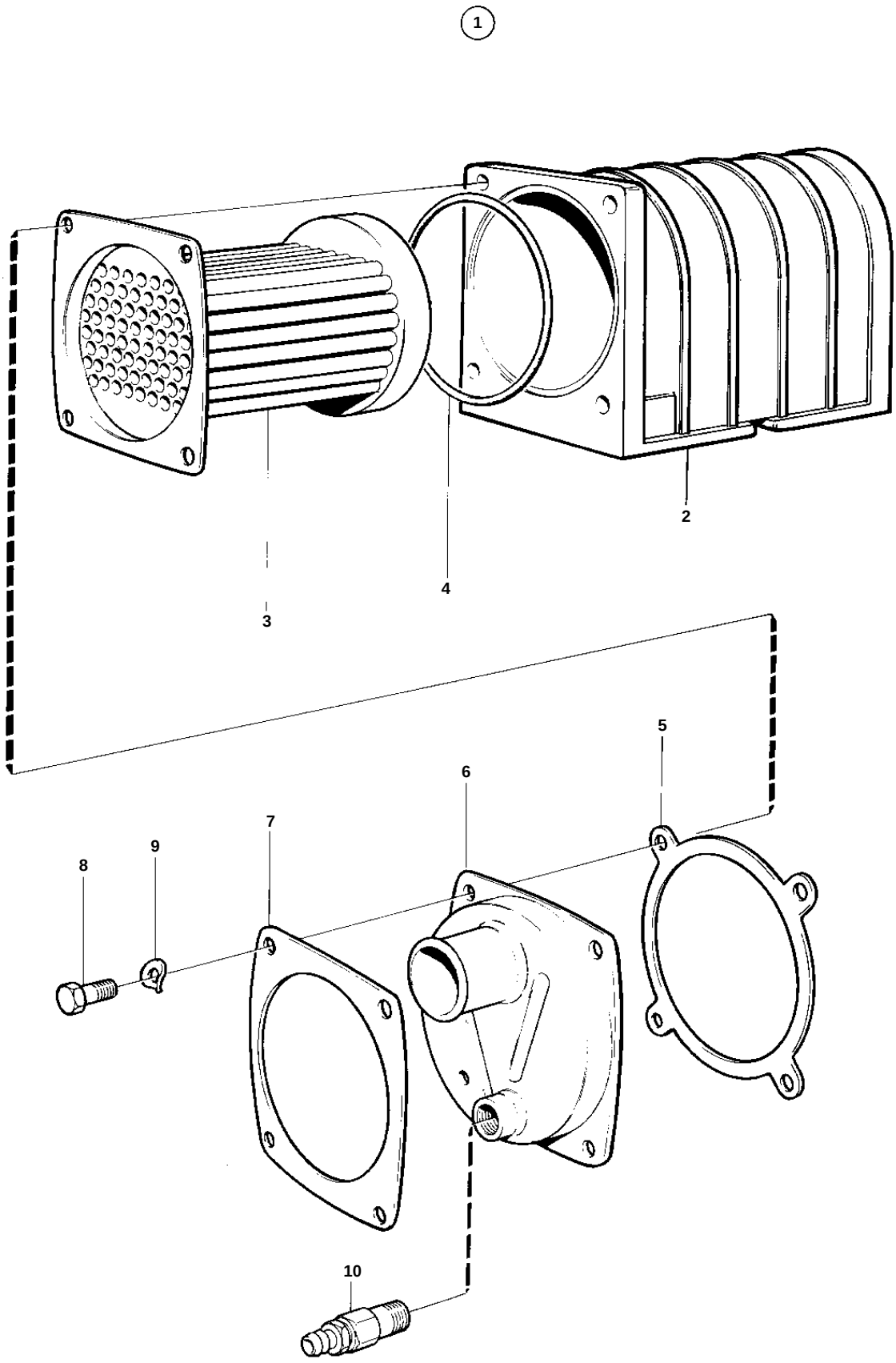

10608

REF	PART NO.	QTY	DESCRIPTION	
1	860633	1	Oil cooler	
2		1	· Housing	
3	860634	1	· Insert	
4	948981	2	· O-ring	
5	842597	1	· Gasket	
6	842602	1	· Cover	
7	842596	1	· Flange	
8	955297	4	· Screw	
9	941907	4	· Spring washer	
10	949918	1	· Drain cock	