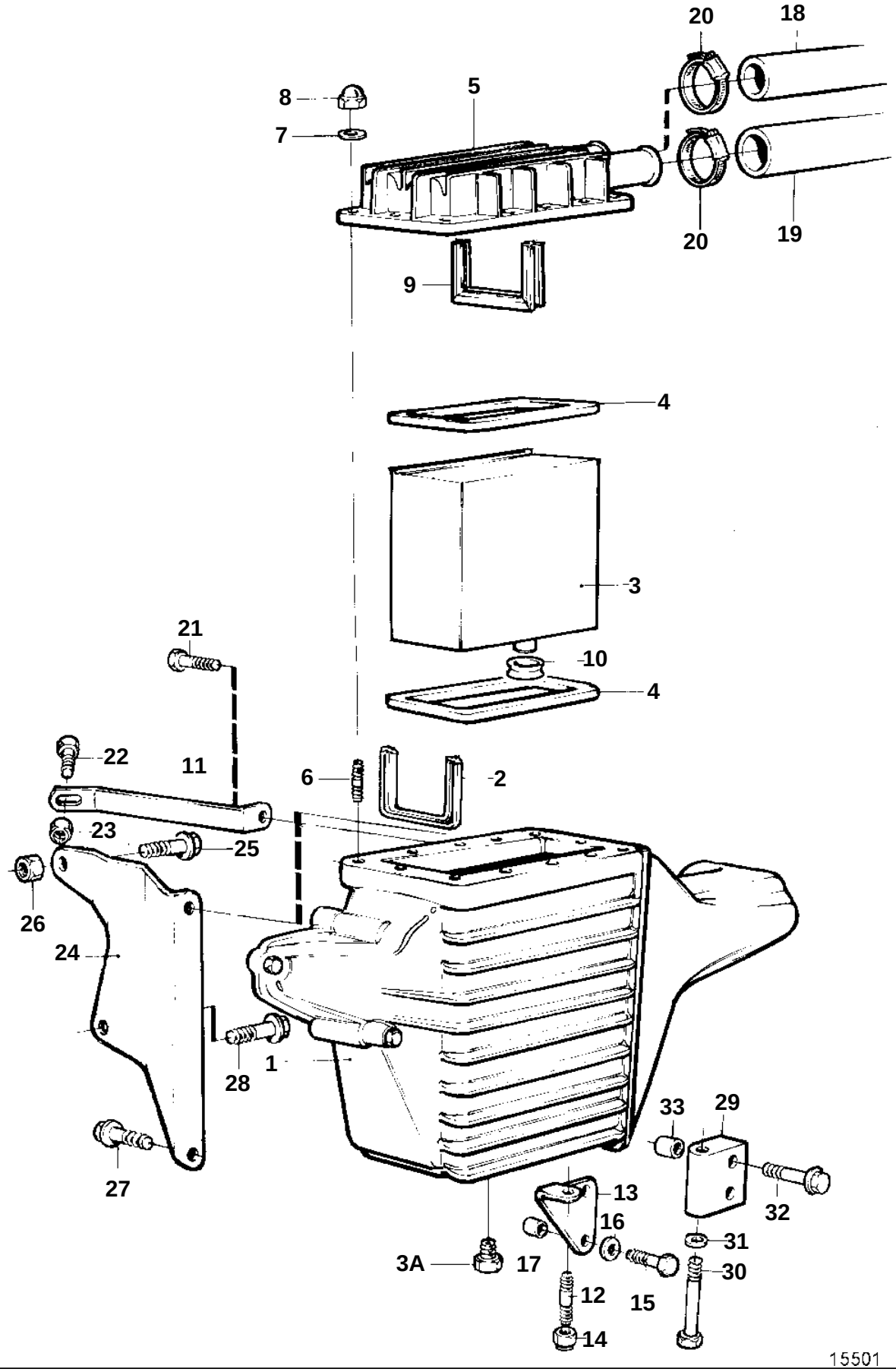
20
18
8
5
7
20
19
9
4
3
21
10
4
22
11
6
2
23
25
26
24
28
1
33
29
27
13
32
16
31
3A
17
30
12
15
14
15501

REF	PART NO.	QTY	DESCRIPTION		NOTES
1	861656	1	Housing		(859354)
2	838831	1	Sealing strip		
3	861553	1	Insert		(861049)
3A	861551	1	· Plug		(861116)
4	860920	2	Gasket		
5	860409	1	Cover		
6	953036	12	Stud		
7	955893	12	Washer		
8	968458	12	Nut		
9	847573	1	Sealing strip		
10	858979	1	Sealing ring		
11	858967	1	Bracket		
12	953041	1	Stud		
13	858965	1	Bracket		
14	968862	1	Nut		
15	965226	2	Flange screw		
16	955897	2	Washer		
17	861554	2	Spacer sleeve		(1572568)
18	860644	1	Hose		After cooler-oil cooler.
19	860645	1	Hose		Heat exchanger-after cooler.
20	943476	2	Hose clamp		
21	946440	1	Flange screw		
22	946934	1	Flange screw		
23	945407	1	Flange nut		