Rudder Indicator Kit for Drive Units

AD31P-A, AD31L-A, TAMD31L-A, TAMD31M-A, TAMD31S-A, TMD31L-A, D41L-A, AD41P-A, AD41L-A, TAMD41P-A, TAMD41L-A, TAMD41M-A, TAMD41H-A, TAMD41H-B, TMD41L-A

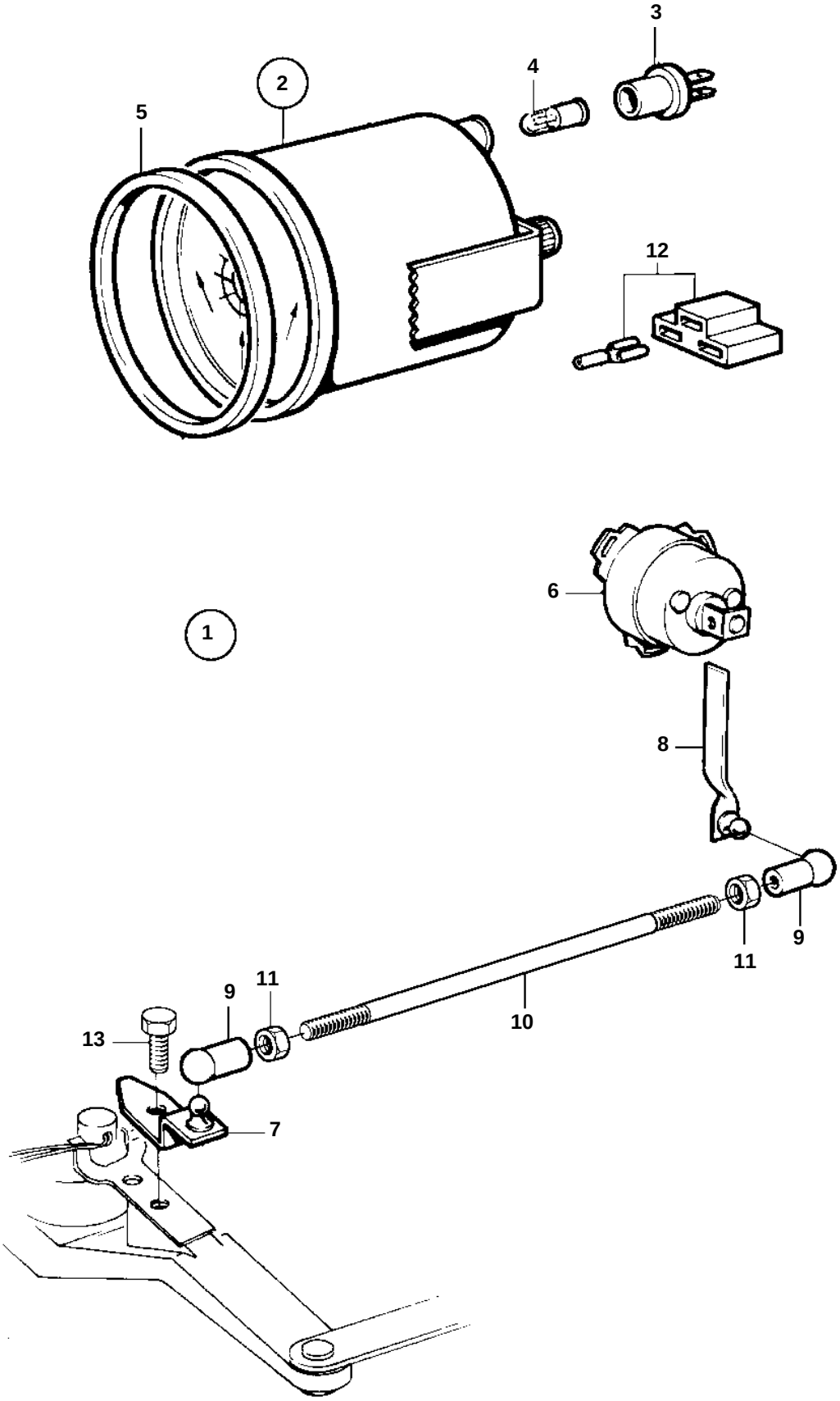

AD31P-A, AD31L-A, TAMD31L-A, TAMD31M-A, TAMD31S-A, TMD31L-A, D41L-A, AD41P-A, AD41L-A, TAMD41P-A, TAMD41L-A, TAMD41M-A, TAMD41H-A, TAMD41H-B, TMD41L-A

REF	PART NO.	QTY	DESCRIPTION		SEE SEC.	NOTES
1	1140463	1	Rudder indicator kit			
2	863944	1	· Rudder indicator			
3	863945	1	· · Bulb socket			
4	863946	1	· · Bulb			12V, 1,2W RED
5	858643	1	· Front ring			
6	837772	1	· Position sensor			
7	853176	1	· Bracket			
8	853177	1	· Lever			
9	946704	1	· Ball socket			Left hand threads.
	946703	1	· Ball socket			Right hand threads.
10	943549	1	· Control rod			
11	942836	1	· Nut			Left hand threads.
	955780	1	· Nut			Right hand threads.
12		X	· Electrical materials		1963	
13	940199	1	Screw			