TMD122A, TAMD122A

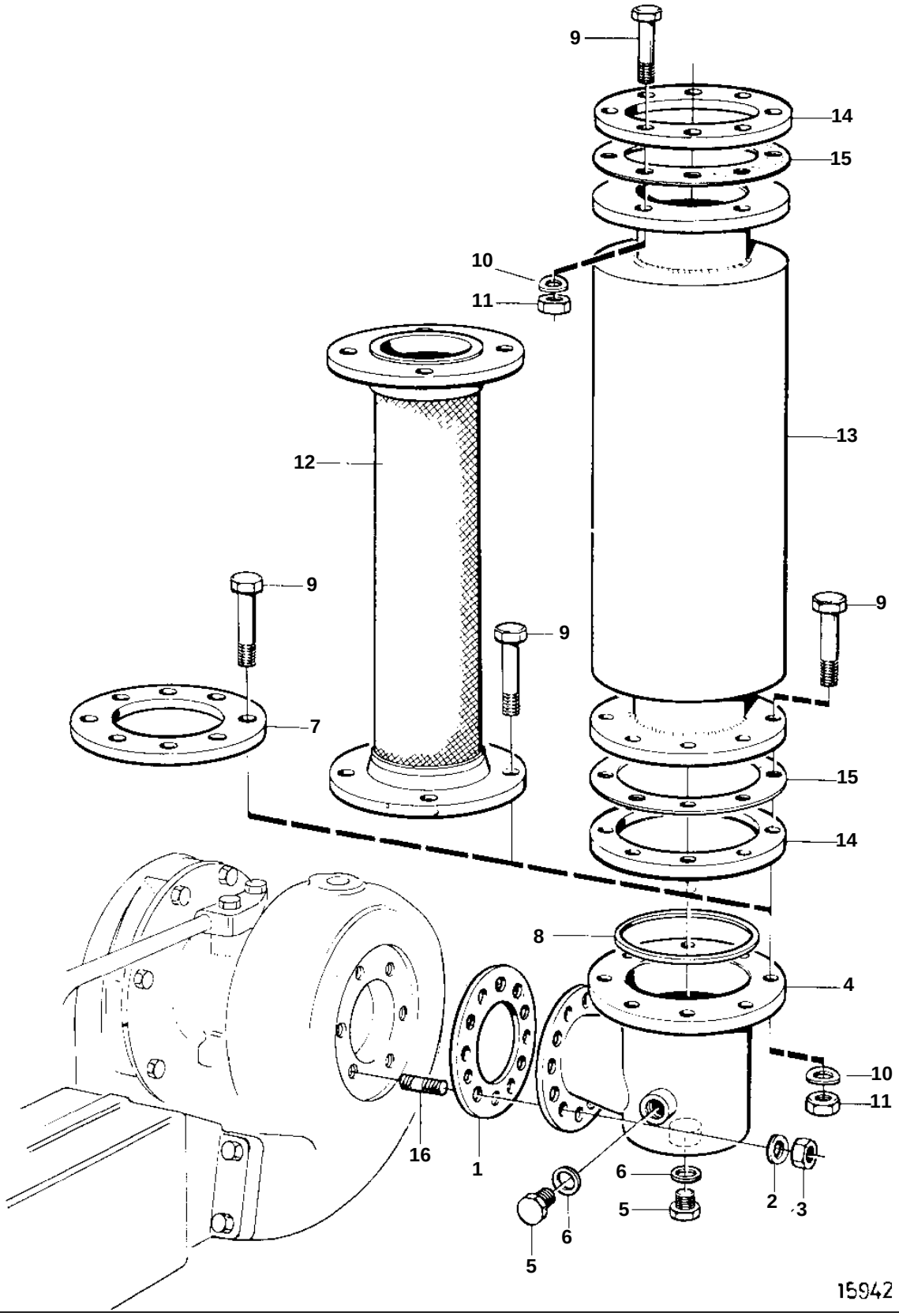

Dry Exhaust Line 6" (150 mm)

TMD122A, TAMD122A

REF	PART NO.	QTY	DESCRIPTION		NOTES
1	424626	1	Gasket		
2	942336	6	Spring washer		
3	191894	6	Nut		
4	842423	1	Exhaust riser		
5	914392	2	Plug		
6	947626	2	Gasket		
7	836887	1	Flange		O.D=265mm, TH=14mm
8	862593	1	Gasket		
9	955366	16	Screw		
10	941912	16	Spring washer		
11	955785	16	Nut		
12	836880	1	Hose		L=590mm
13	863049	1	Muffler		(837224)
14		2	Weld flange		O.D=279mm, TH=12mm
15	862976	2	Gasket		
16	953259	6	Stud		