Reverse Gear Suspension for Twin Disc MG514, MG5111SC, MG5114SC: Twin Disc MG5111SC

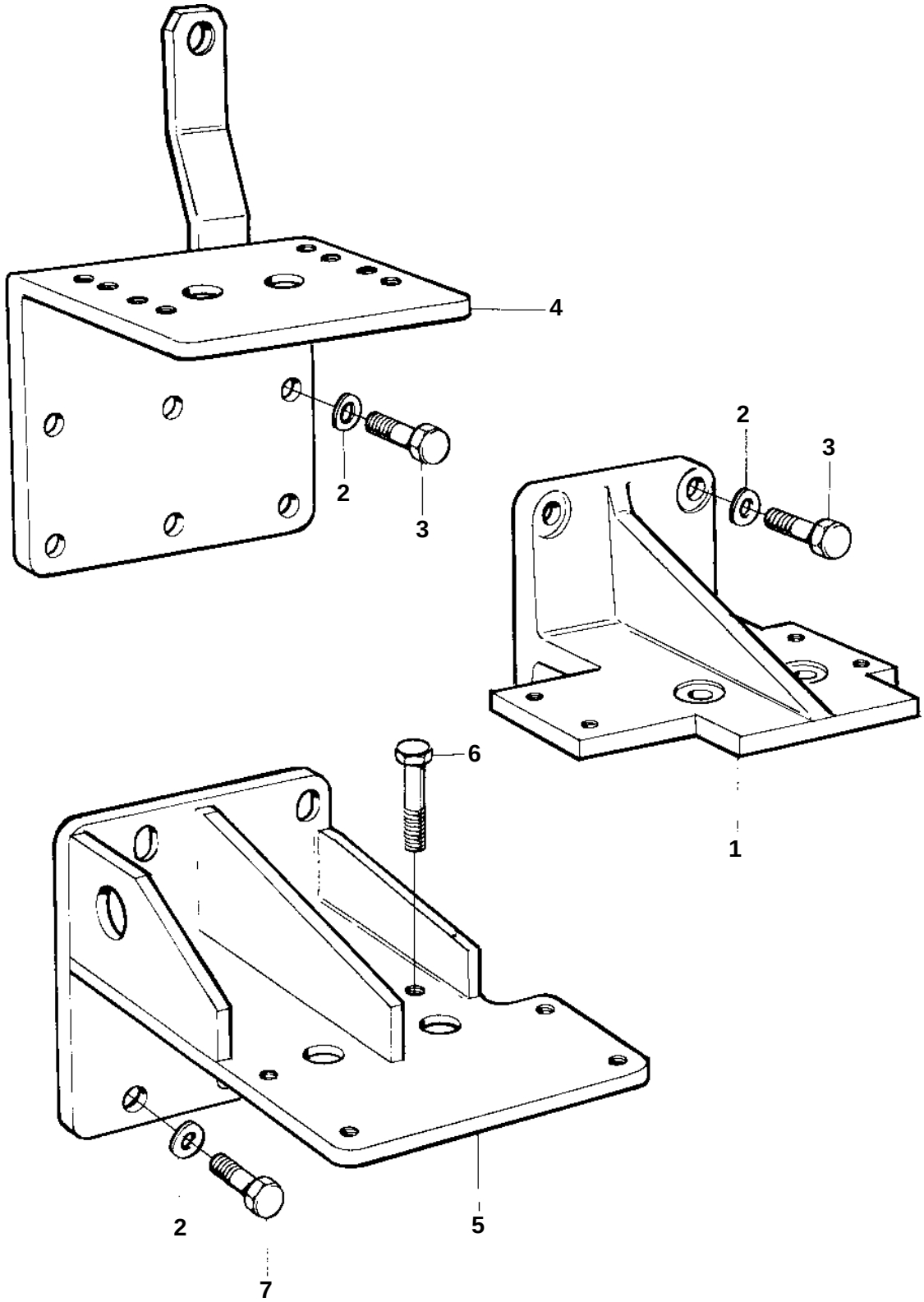

16111

REF	PART NO.	QTY	DESCRIPTION		NOTES
2	941913	8	Spring washer		
5	863967	1	Bracket		S.B
	863966	1	Bracket		P
6	970972	2	Screw		
7	955590	8	Screw		