Reverse Gear Suspension for Twin Disc MG514, MG5111SC, MG5114SC: Twin Disc MG514SC

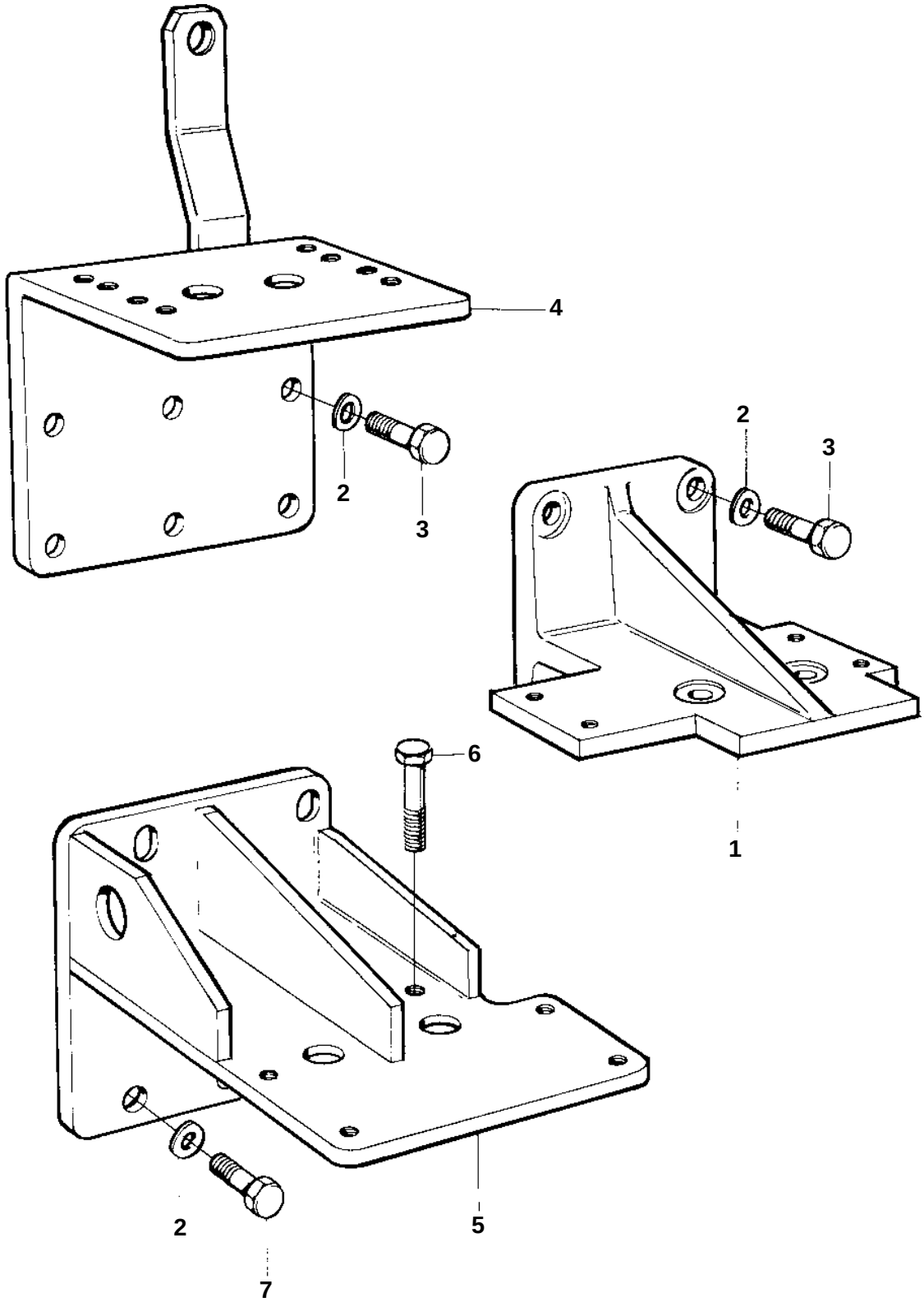

16111

REF	PART NO.	QTY	DESCRIPTION		NOTES
1	837088	1	Bracket		S.B
	837068	1	Bracket	OP	P
2	941913	8	Spring washer		
3		8	Screw		