Reverse Gear Suspension for Twin Disc MG5091, Twin Disc MG5111A: Twin Disc MG 5111A

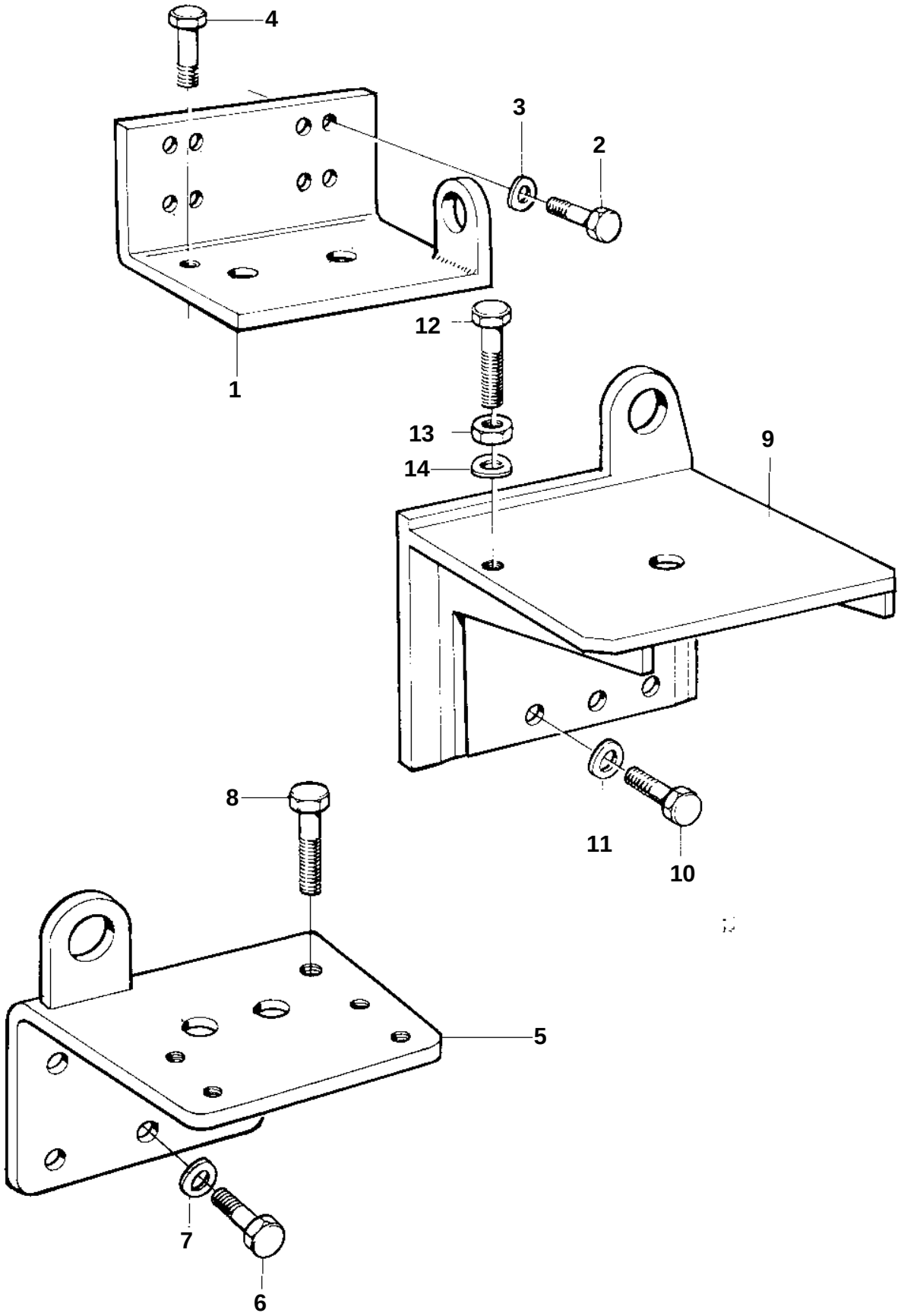

16078

REF	PART NO.	QTY	DESCRIPTION		NOTES
9	863044	1	Bracket		S.B
	863045	1	Bracket		P
10	955590	12	Screw		
11	941912	12	Spring washer		
12	977987	2	Adjuster screw		
13	971072	2	Nut		
14	940280	2	Spring washer		