Main Instrument Panel 24V: 864046

TMD121C, TAMD121C, TAMD121D, TAMD122C, TAMD122D

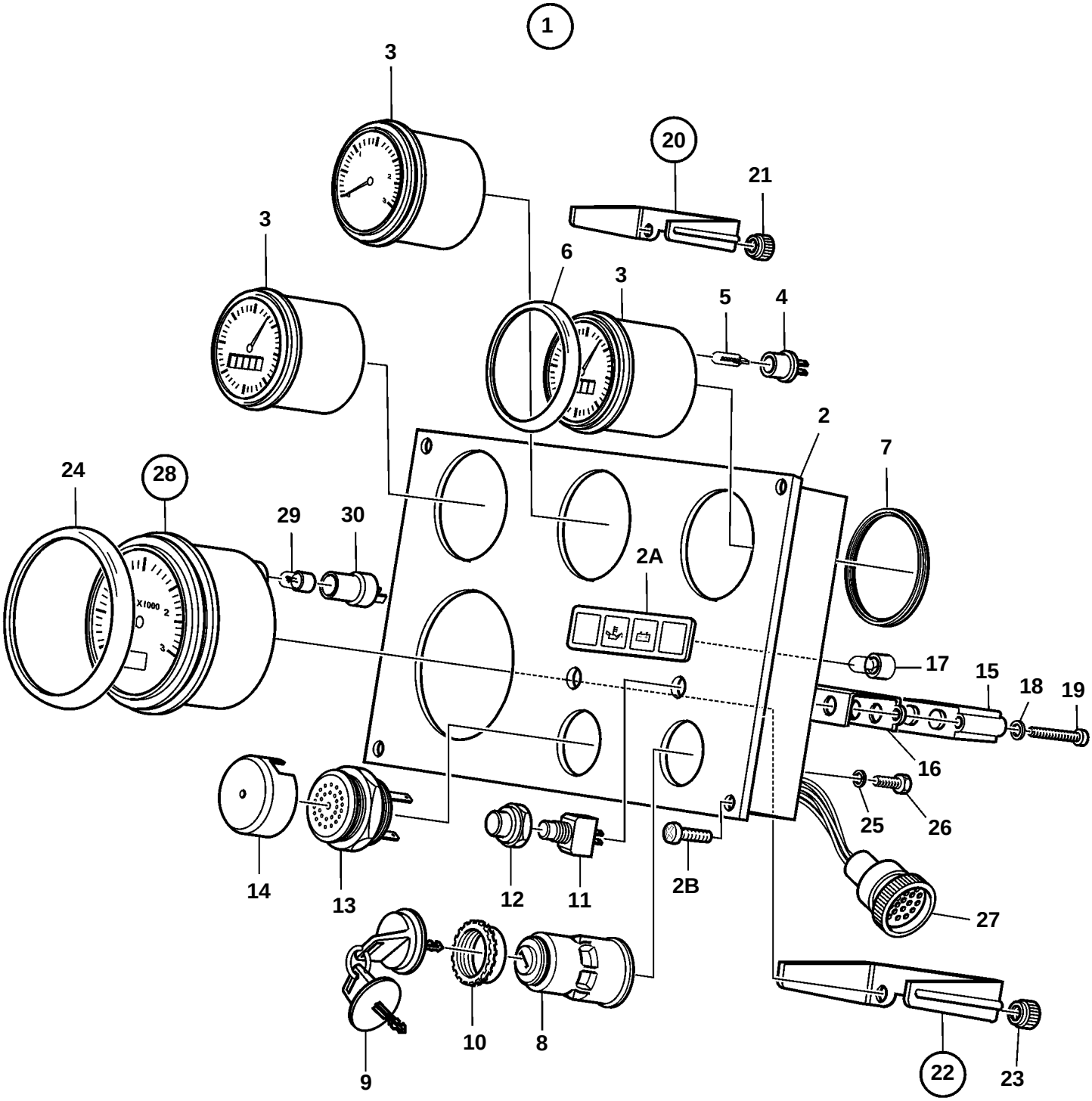

TMD121C, TAMD121C, TAMD121D, TAMD122C, TAMD122D

REF	PART NO.	QTY	DESCRIPTION		SEE SEC.	NOTES
1	864046	1	Instrument panel			REPLACED BY 873591
2	860182	1	· Instrument panel			
2A	858645	1	· Symbol strip			
2B	828647	4	· Screw			
3	863933	1	· Thermometer			REPL BY 873196
3	863935	1	· Oil pressure gauge			REPL BY 873198
3	863931	1	· Voltmeter			REPL BY 873200
4	863945	3	· · Bulb socket			
5	863947	3	· · Bulb			
6	858643	3	· Front ring			D=52mm
7	828803	3	· Ring			
8	864277	1	· Starter switch			
9	859953	1	· · Key	SO		State key code when ordering.
			· · Bulletin 49-30		49-30-EN	Key P/N 859953
10	859955	1	· · Plastic nut			
11	828584	1	· Switch			TEST ALARM
	828585	1	· Switch			INSTR. LIGHT
12	828586	2	· Nut			
13	828587	1	· Buzzer			
14	858795	1	· Protecting casing			
15	828783	1	· Electronic unit			
16	828784	1	· Reflector			
17	828818	4	· Bulb			24V
18	941904	2	· Spring washer			
19	941615	2	· Screw			
24	858644	1	· Front ring			
25	941904	1	· Spring washer			
26	949947	1	· Screw			
27	828646	1	· Cable trunk			
28	864021	1	· Tachometer			2600 RPM REPL BY 854910
	854910	1	· Tachometer			2600 RPM