TAD1030P, TAMD102D, TD1010G, TWD1010G, TAD1030G

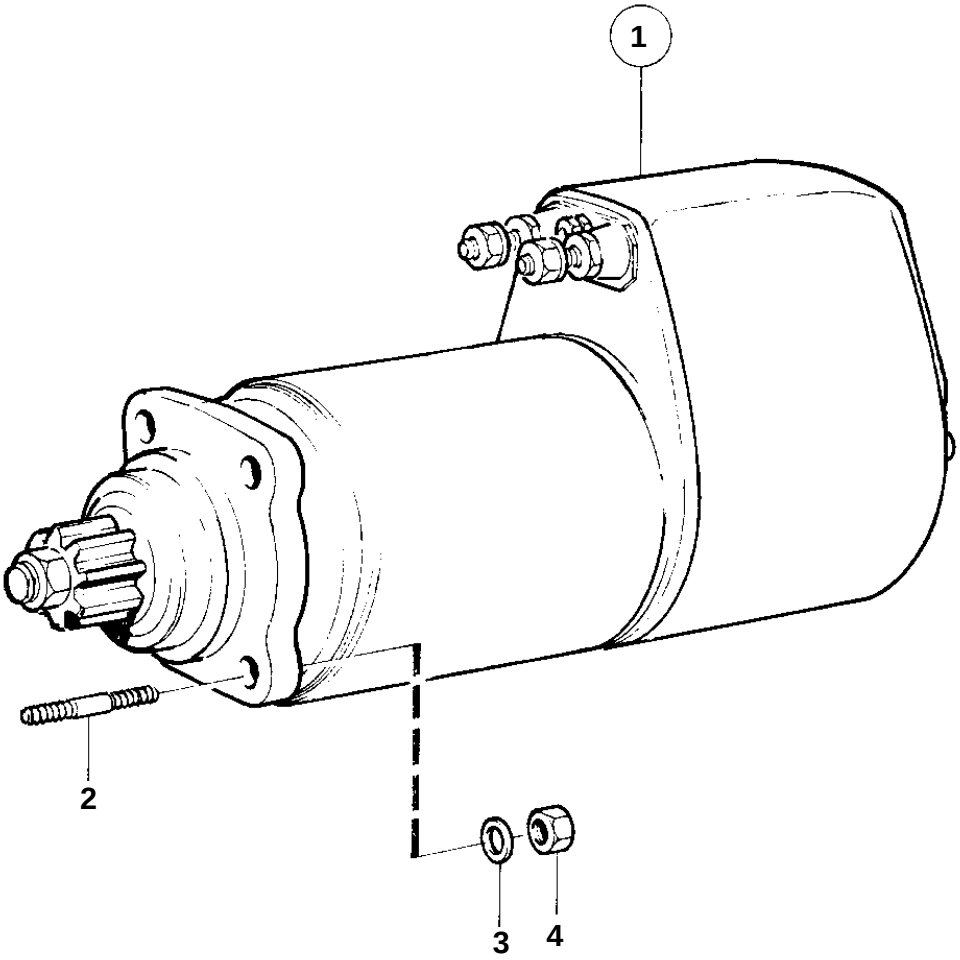

8716

TAD1030P, TAMD102D, TD1010G, TWD1010G, TAD1030G

REF	PART NO.	QTY	DESCRIPTION		SEE SEC.	NOTES
1	847330	1	Starter motor			24V
					121	
2	953486	3	Stud			
3	942336	3	Spring washer			
4	955827	3	Nut			