Electrical Box For Singel Electrical System: 838419

COMMON

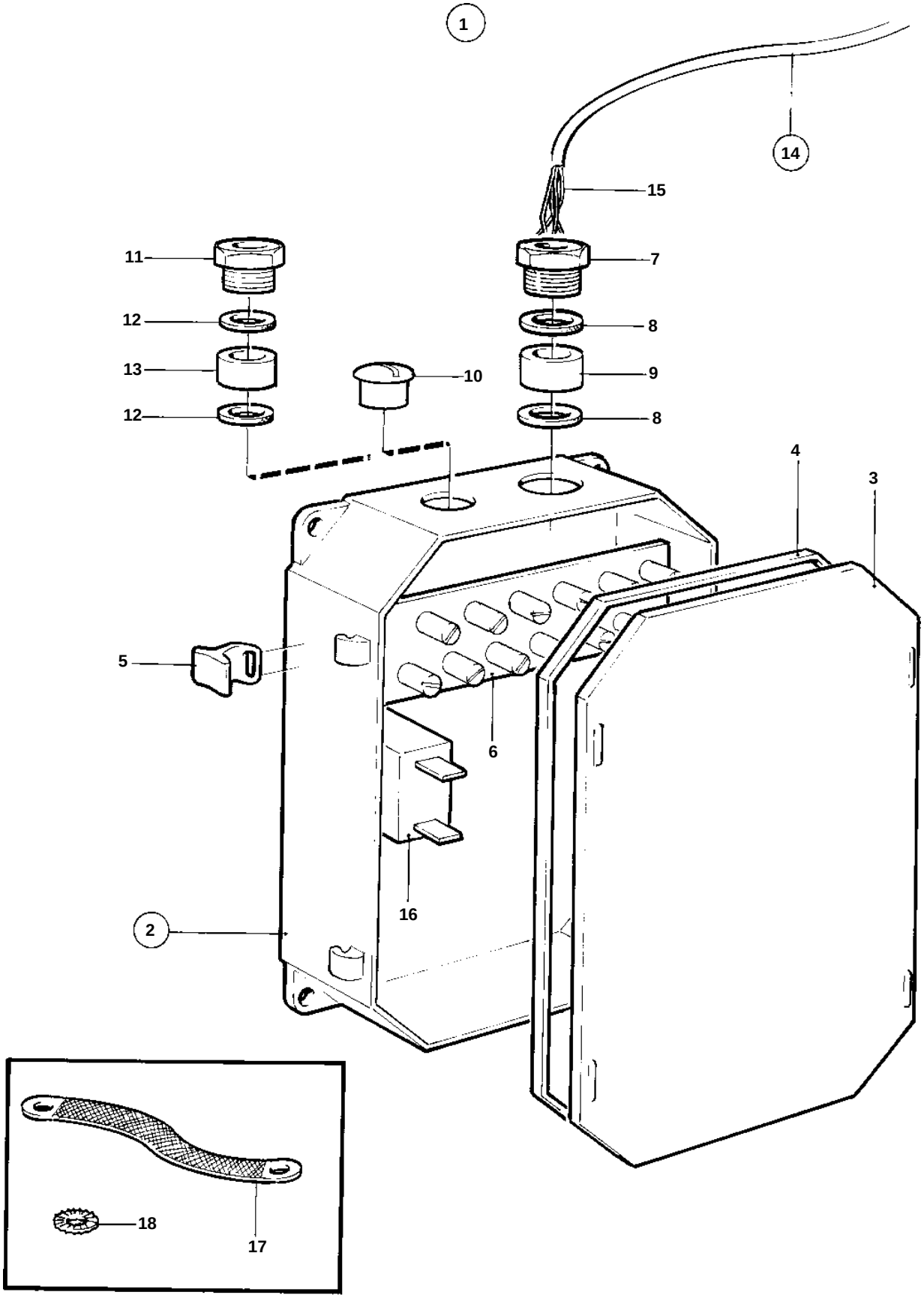

6751

COMMON

REF	PART NO.	QTY	DESCRIPTION		SEE SEC.	NOTES
1	838419	1	Electrical distribut			For instument panel not made by Volvo Penta.
2		1	· Clutch housing			
3	847077	1	· · Cover			
4		1	· · Gasket			
5		4	· · Latch			
6		2	· · Current bar			
7		1	· · Grommet			
8		2	· · Rubber gasket			
9		1	· · Washer			
10		3	· · Plug			
11		3	· Grommet			
12		6	· Washer			
13	1585449	3	· Gasket			
14			· Cable trunk			
15		X	· · Cables and terminals		1963	