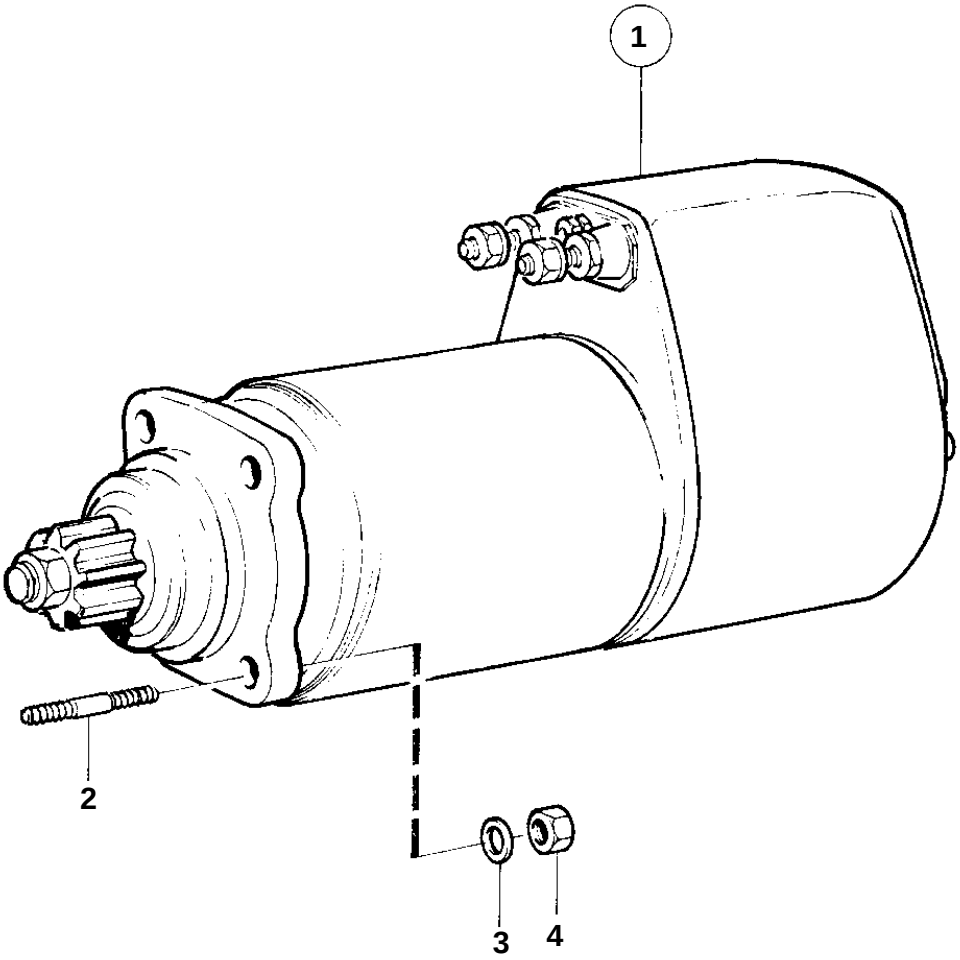

8716

TMD100C

REF	PART NO.	QTY	DESCRIPTION		SEE SEC.
1	847330	1	Starter motor		
					030-1525
2	953486	3	Stud		
3	942336	3	Spring washer		
4	955827	3	Nut		