ENGINE SUSPENSION FOR ENGINE WITH FRONT POWER TAKE-OFF: TD120BHC

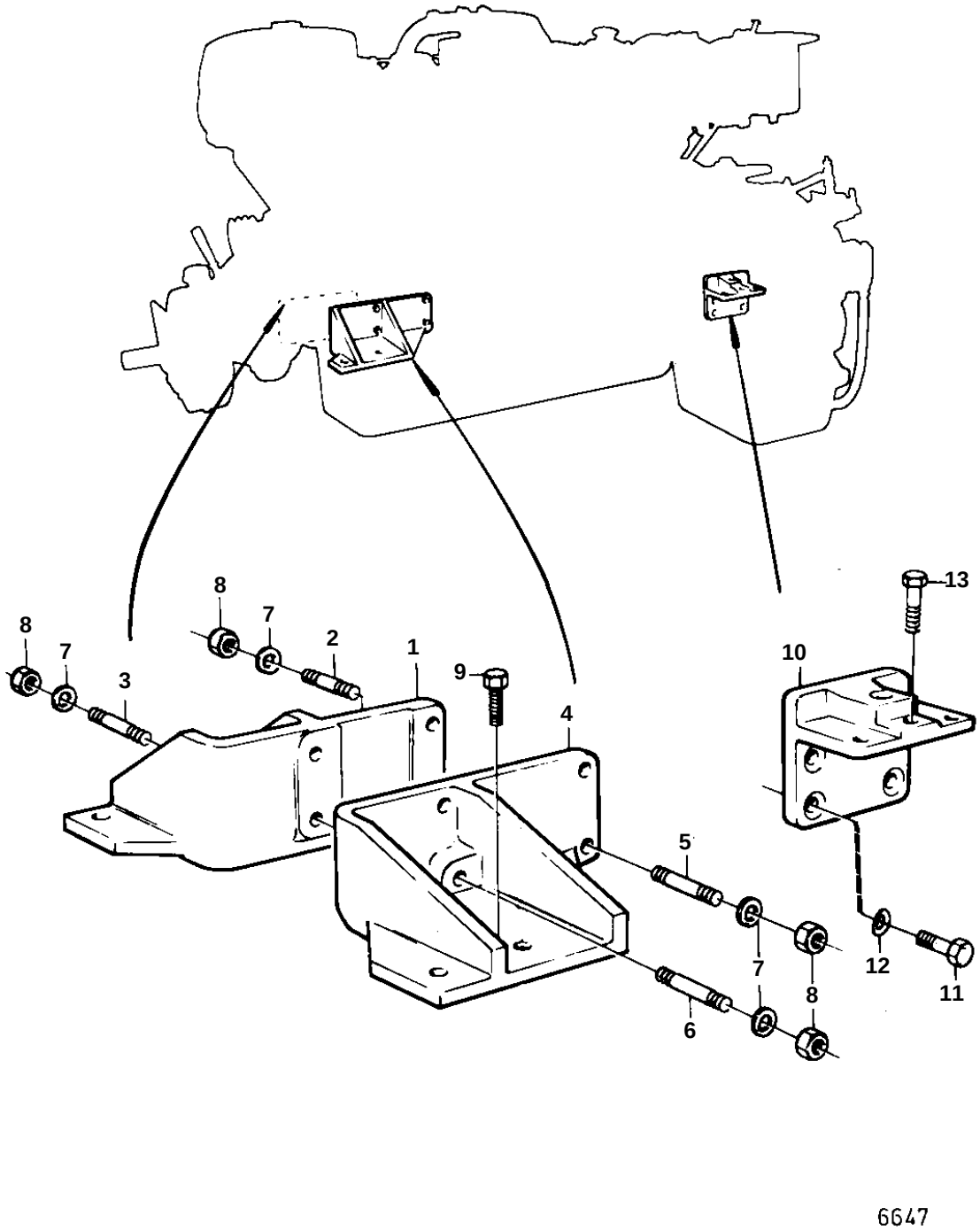

REF	PART NO.	QTY	DESCRIPTION		NOTES
1	837587	1	Bracket		S.B SEE GROUP 4A
2	953351	3	Stud		L = 70 MM
3	953346	1	Stud		L = 55 MM
4	837477	1	Bracket		P SEE GROUP 4A
5	953346	1	Stud		L = 55 MM
6	953351	1	Stud		L = 70 MM
5	953350	2	Stud		L = 65 MM
7	941911	8	Spring washer		
8	955828	8	Nut		
9	955561	2	Screw		
10	821685	2	Engine bracket		
11	960737	8	Screw		
12	940280	8	Spring washer		
13	955591	8	Screw		