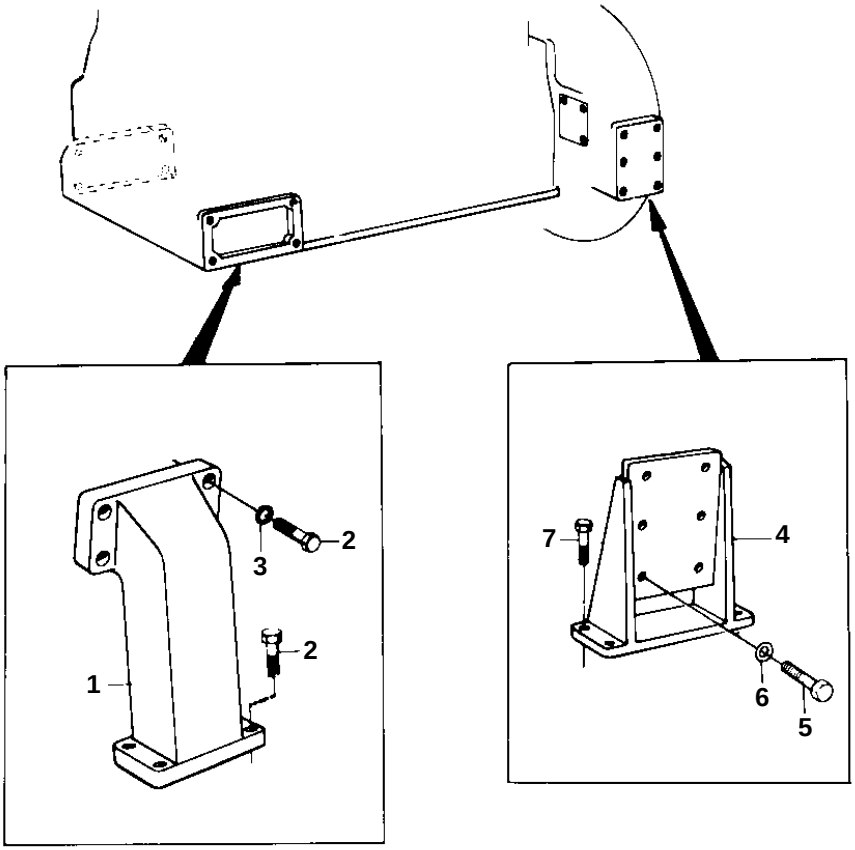

6728

REF	PART NO.	QTY	DESCRIPTION		NOTES
1	823534	2	Bracket		
2	955580	8	Screw		L = 57 MM
3	941911	8	Spring washer		
4	843070	2	Bracket		
5	955561	12	Screw		L = 32 MM
6	940280	12	Spring washer		