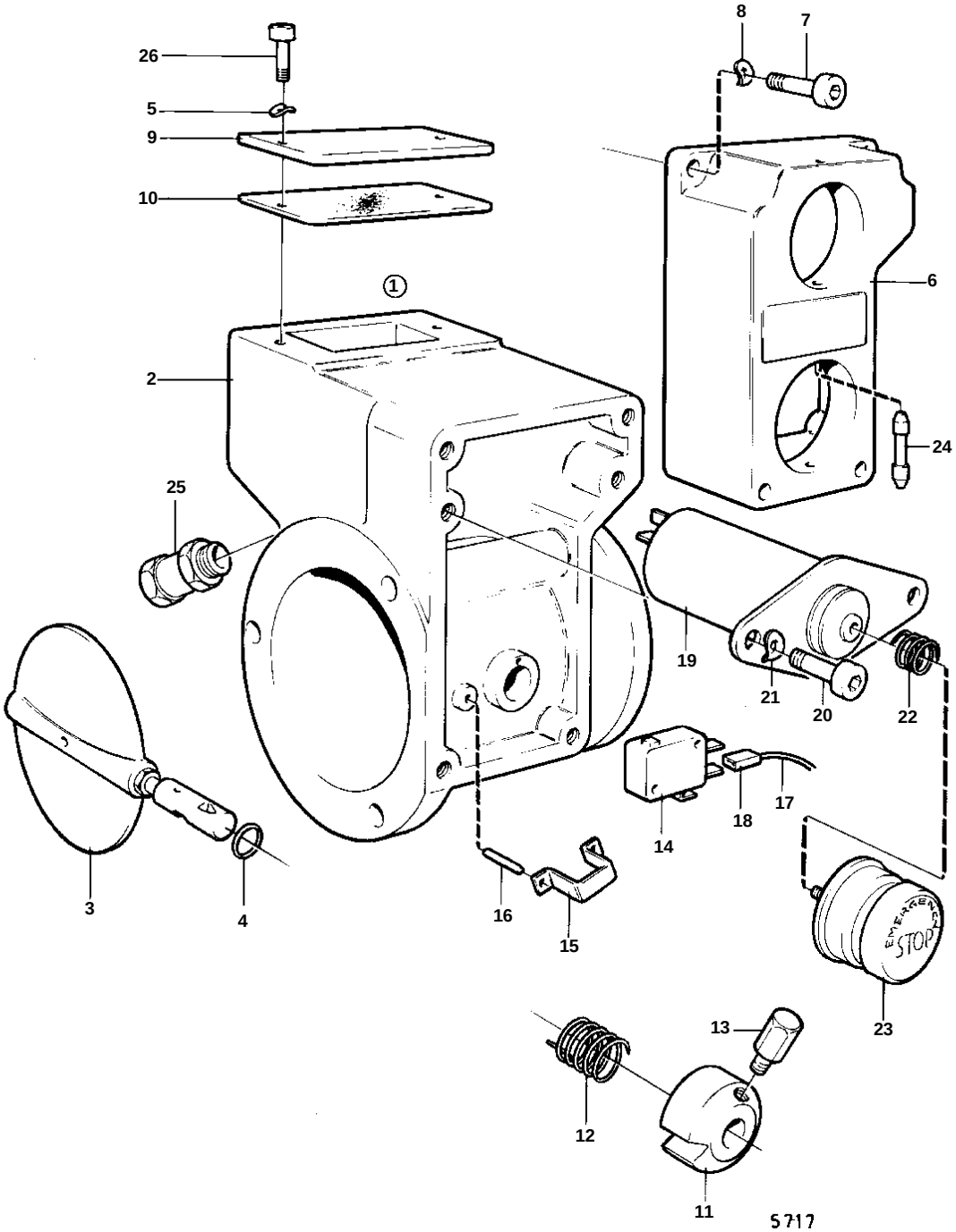
26
5
9
10
1
2
25
8
7
6
24
19
21
20
22
18
17
14
3
4
16
15
13
12
11
23
STOP
5717

REF	PART NO.	QTY	DESCRIPTION		SEE SEC.	NOTES
1	845590	1	Shutter housing			
2		1	· HOUSING			
3		1	· SHUTTER			
4	925053	1	· O-ring			
5	941905	2	Spring washer			
6	842893	1	Cover			
7	959190	4	Screw			
8	941905	4	Spring washer			
9	843696	1	Cover			
10	843697	1	Gasket			
11	842899	1	Sleeve			
12	842898	1	Spring			
13	842903	1	Knob			
14	850200	1	Switch			
15	844574	1	Spring			
16	951938	2	Spring pin			
17		X	CABLES			FOR CABLE AREA 0,75-2,0 SQMM.
18		X	CABLE TERMINALS		030-1000	
19	842894	1	Magnet			
20	942001	2	Screw			
21	941906	2	Spring washer			
22	842900	1	Spring			
23	842897	1	Stop device			
24	842902	1	Piston			
25	844576	1	Cable union			
26	941460	2	Screw			