OIL AND FUEL SUPERVISION WITH INSTALLATION COMPONENTS: TD121CHC

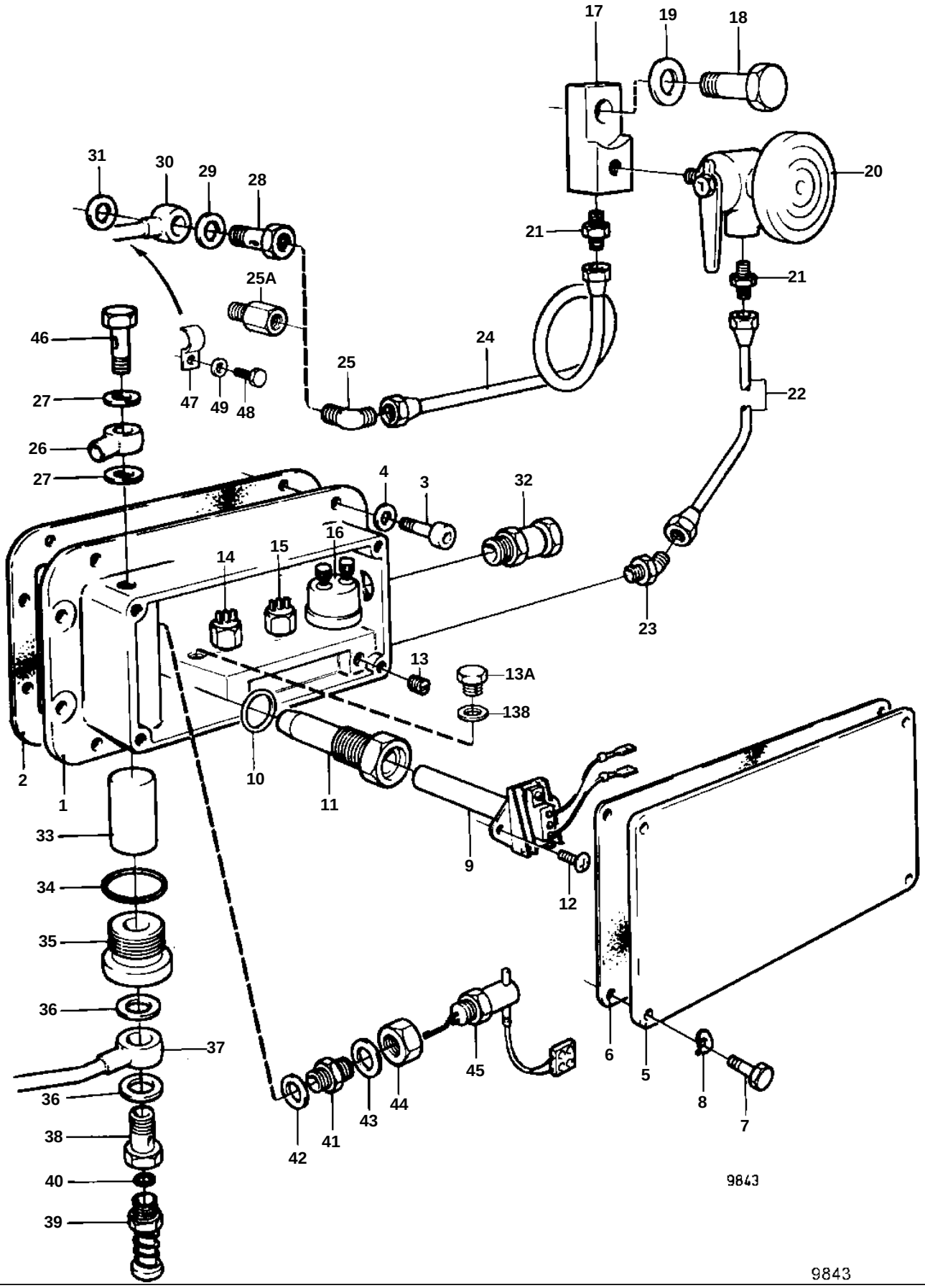

REF	PART NO.	QTY	DESCRIPTION		NOTES
1	845627	1	Housing		
2	862597	1	Gasket		
3	956569	12	Screw		
4	11992	12	Gasket		
5	845708	1	Cover		
6	845709	1	Gasket		
7	846431	4	Screw		
8	941906	4	Spring washer		
9	843768	1	Thermo monitor		
10	957179	1	Gasket		
11	843288	1	Sleeve		
12	956062	2	Screw		
13	16325	5	Plug		
14	864285	1	Pressure monitor		ALARM
15	864284	1	Pressure monitor		STOP
16	881432	1	Pressure sensor		
17	844120	1	Bracket		
18	955590	1	Screw		
19	941912	1	Spring washer		
20	836273	1	Tap		
21	954335	2	Fitting		
22	844284	1	Tube		
23	831965	1	Nipple		
24	844283	1	Tube		
25	954342	1	Elbow union		
25A	835980	1	Nipple		
26	25168	1	Banjo nipple		
27	957178	2	Gasket		
28	942008	1	Hollow screw		SEE GROUP 2B
29	942703	1	Gasket		SEE GROUP 2B
30	822571	1	Tube		SEE GROUP 2B
31	957181	1	Gasket		SEE GROUP 2B
32	881193	1	Cable union		
33	843815	1	Float		
34	957191	1	Gasket		
35	843639	1	Plug		
36	957178	2	Gasket		
37	847001	1	Tube		SEE GROUP 2C
38	823417	1	Hollow screw		
39	844770	1	Valve		
40	960202	1	O-ring		
41	843688	1	Nipple		
42	957181	1	Gasket		
43	15304	1	Gasket		
44	843640	1	Lock nut		
45	843757	1	Flow sensor		
46	25167	1	Hollow screw		
47	940374	2	Clamp		
48	956570	2	Screw		
49	955894	2	Washer		