TAMD74A-A, TAMD74A-B, TAMD74C-A, TAMD74C-B, TAMD74L-A, TAMD74L-B, TAMD74P-A, TAMD74P-B, TAMD75P-A

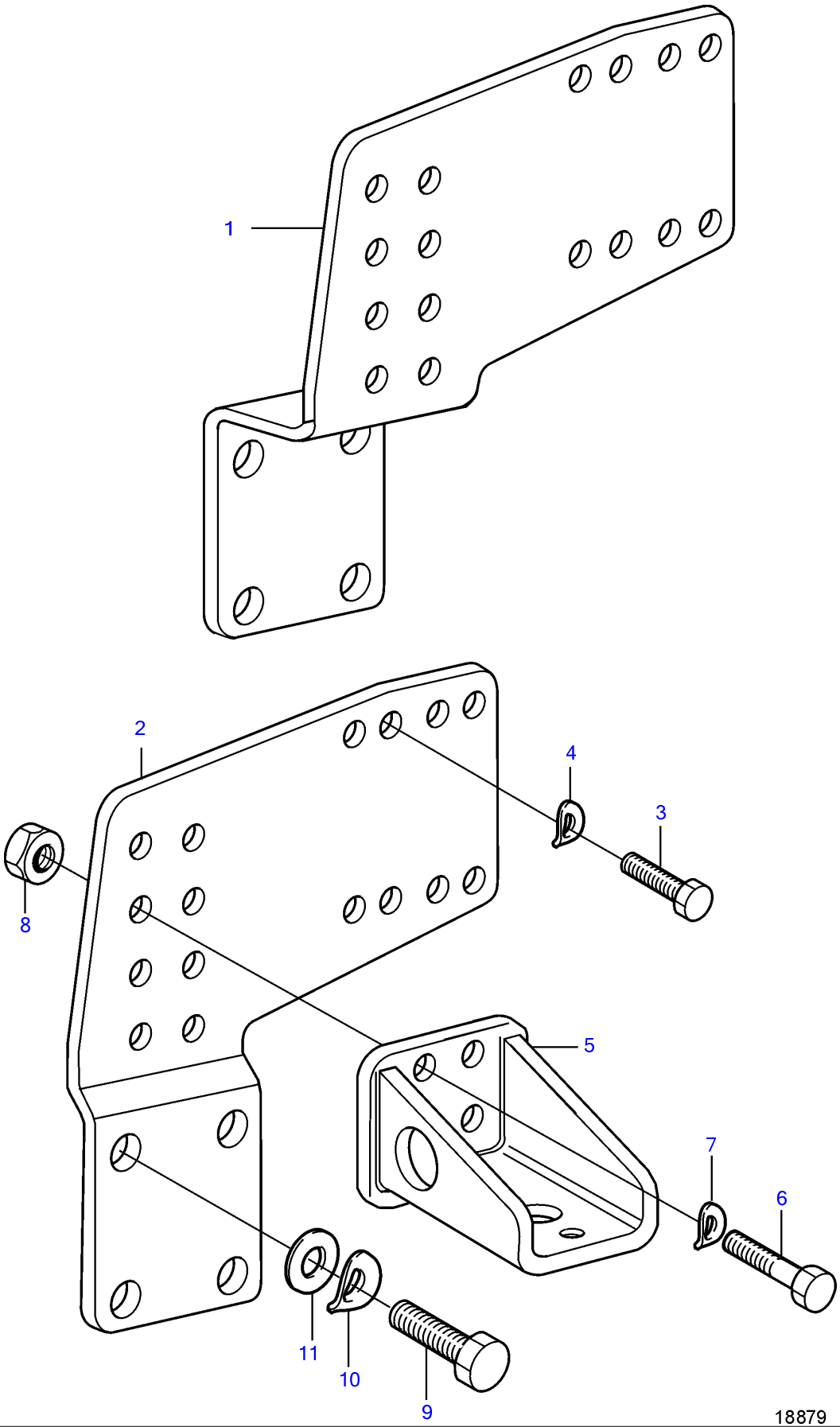

TAMD74A-A, TAMD74A-B, TAMD74C-A, TAMD74C-B, TAMD74L-A, TAMD74L-B, TAMD74P-A, TAMD74P-B, TAMD75P-A

REF	PART NO.	QTY	DESCRIPTION	NOTES
1	3830931	1	Bracket	S.B (3828364)
2	3830930	1	Bracket	P (3828363)
3	970900	8	Hexagon screw	
4	940280	8	Spring washer	
5	848369	2	Bracket	
6	970900	8	Hexagon screw	
7	940280	8	Spring washer	
8	963108	8	Lock nut	
9	955363	8	Hexagon screw	
10	941912	8	Spring washer	
11	955900	8	Washer	