TAMD74A, TAMD74A-A, TAMD74A-B, TAMD74C-A, TAMD74C-B, TAMD74L-A, TAMD74L-B, TAMD74P-A, TAMD74P-B

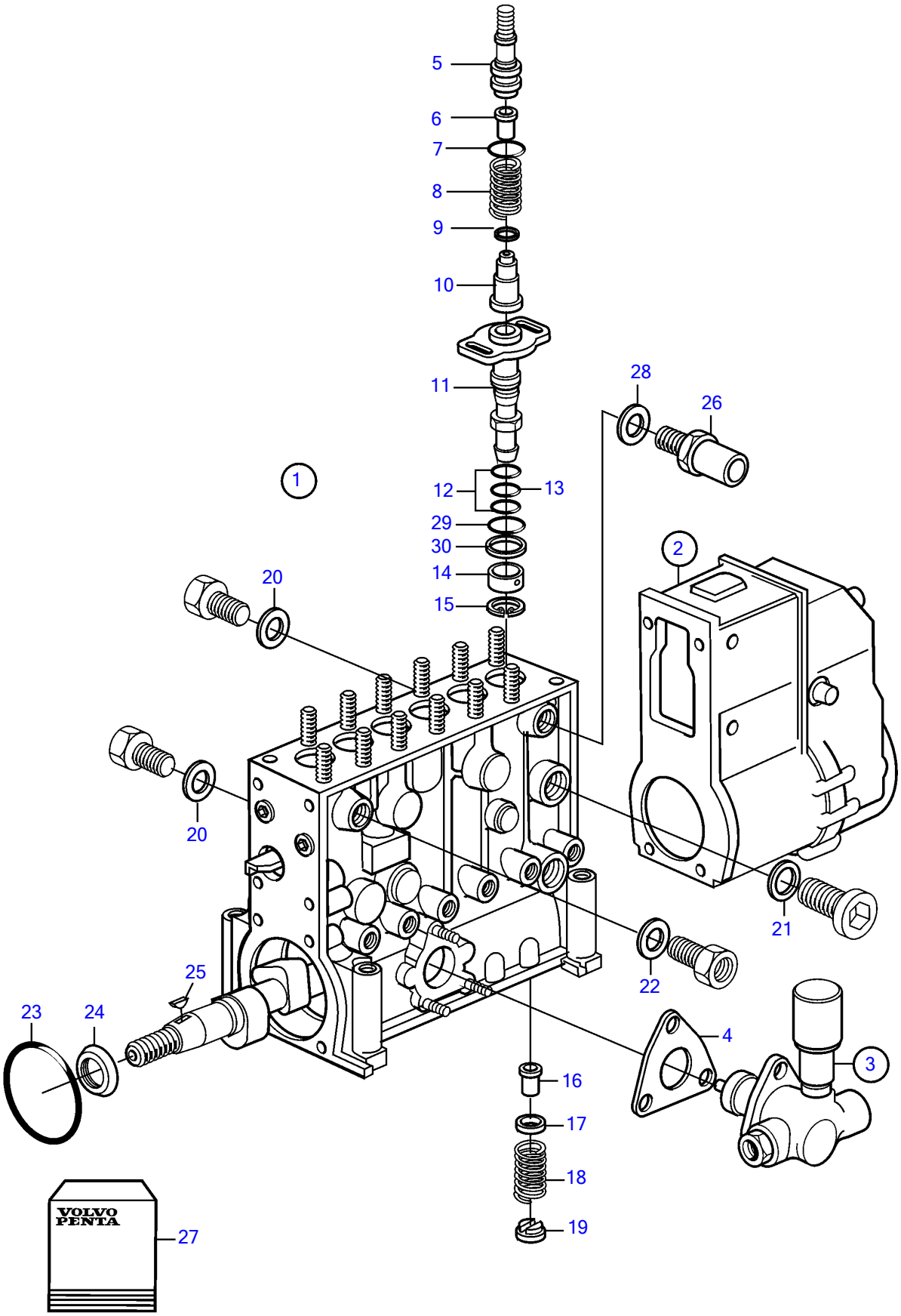

18460

TAMD74A, TAMD74A-A, TAMD74A-B, TAMD74C-A, TAMD74C-B, TAMD74L-A, TAMD74L-B, TAMD74P-A, TAMD74P-B

REF	PART NO.	QTY	DESCRIPTION	SEE SEC.	NOTES
1	3803791	1	Injection pump		(3827154)
2	(3825500)	1	・Governor		Obsolete part
			・・parts not sold separately		
3	863474	1	・Feed pump		
			・・		
			・	460	
4	863370	1	・Gasket		
5	3828814	6	・Delivery valve retai		
6	1699453	6	・Peg		
7	862400	6	・O-ring		
8	1699454	6	・Compression spring		
9	1697951		・Sealing washer		
10	3829206	6	・Delivery valve		
	3828815		・Delivery valve		
11	(3829207)	6	・Pump element tappet		Obsolete part
	3097195		・Pump element tappet		
12	(3094382)	12	・Support ring		Obsolete part
13	240422	6	・O-ring		
14	1699766	6	・Carton		
15	(1699457)	6	・Stop ring		Obsolete part
16	862406	6	・Control sleeve		
17	239984	6	・Spring disc		
18	(1699465)	6	・Compression spring		Obsolete part
19	862408	6	・Spring disc		
20	239897	2	・Sealing ring		
21	240017	1	・Gasket		
22	11996	1	・Gasket		
23	862423	1	・O-ring		
24	3828816	1	・Sealing ring		
25	35168	1	・Key		
26	11996309	1	・Overflow valve		
27	11998401	1	・Small parts kit		
28	239897	1	Sealing ring		
29	11996307	6	O-ring		
30	862402	1	O-ring		