TAMD74A, TAMD74A-A, TAMD74A-B, TAMD74C-A, TAMD74C-B, TAMD74L-A, TAMD74L-B, TAMD74P-A, TAMD74P-B, TAMD75P-A

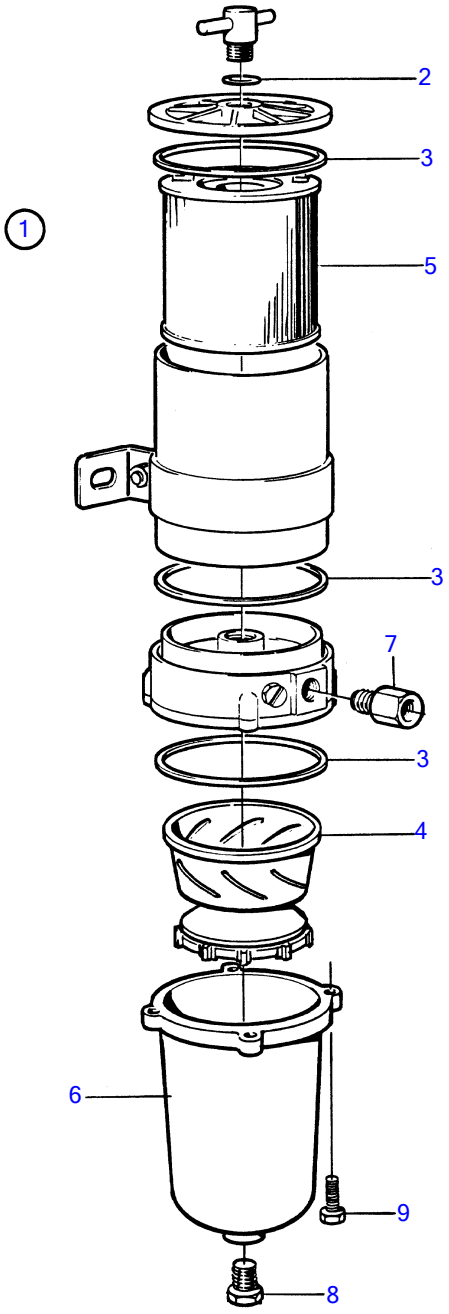

15385

TAMD74A, TAMD74A-A, TAMD74A-B, TAMD74C-A, TAMD74C-B, TAMD74L-A, TAMD74L-B, TAMD74P-A, TAMD74P-B, TAMD75P-A

REF	PART NO.	QTY	DESCRIPTION	SEE SEC.	NOTES
1	3825018	1	Fuel filter		Repl by 877768
			・Bulletin 50-11A	50-11A-EN	Fuel Filters / Water Separators
1	877768	1	Fuel filter		
2	838506	1	・O-ring		
3	846719	3	・Gasket		
4	3825028	1	・Turbine		
5	3838852	1	・Fuel filter insert		(3825027) 10 micron
6	3838851	1	・Bowl		Metal bowl., (848293)
7	846620	2	・Nipple		
8	952075	1	・Plug		
9	940094	4	・Hexagon screw		