TAMD72P-A, TAMD72WJ-A

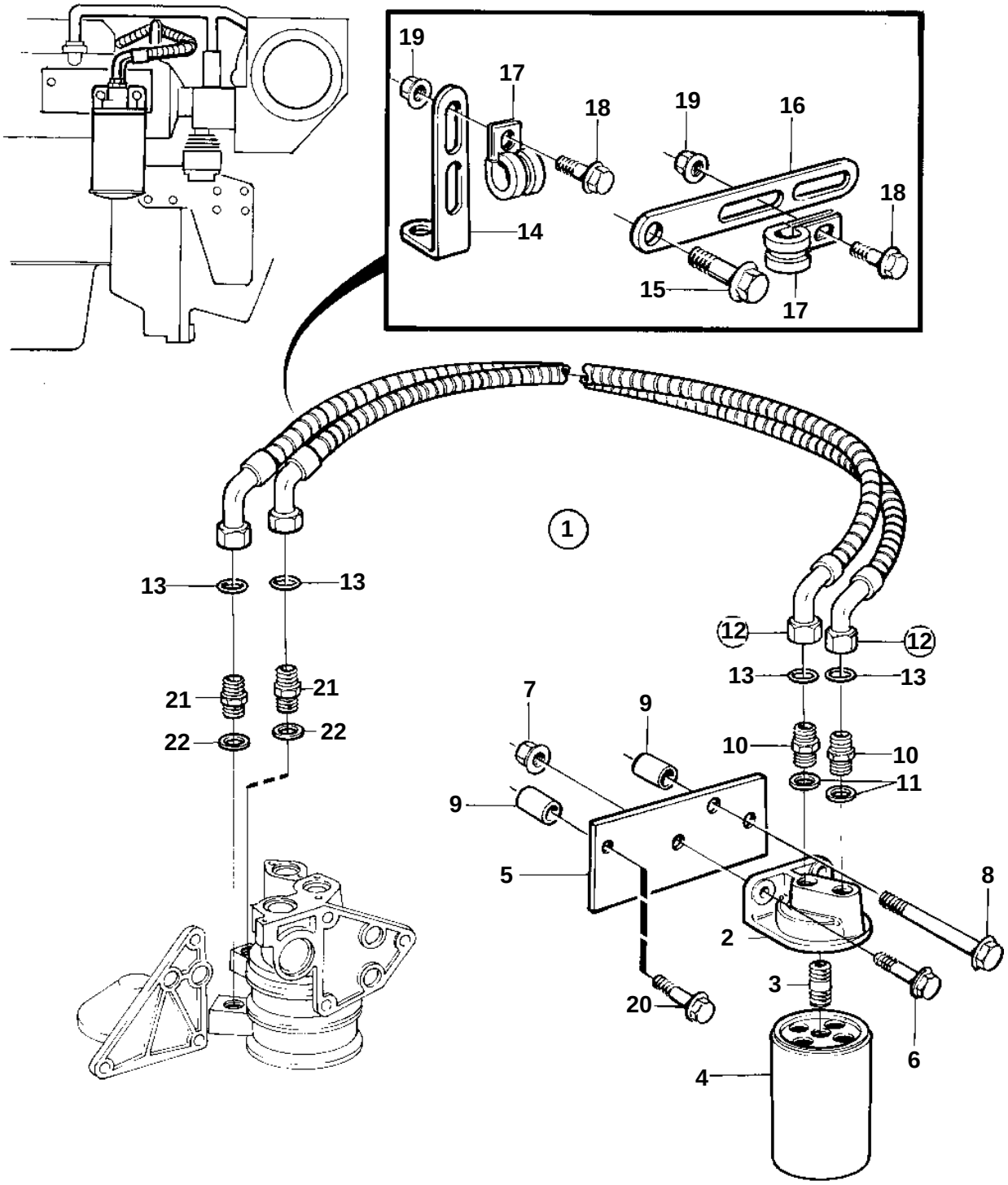

11200

TAMD72P-A, TAMD72WJ-A

REF	PART NO.	QTY	DESCRIPTION		NOTES
1		1	Oil filter		
2	848509	1	· Housing		
3	466623	1	· Nipple		
4	847741	1	· Oil filter		
5	865043	1	· Bracket		
6	946329	2	· Flange screw		(946329)
7	971095	2	· Nut		
8	970964	1	· Screw		M10x140mm
9	843028	2	· Spacer sleeve		
10	947554	2	· Nipple		M26x1,5
11	948885	2	· Gasket		
12	863613	2	· Hose		
13	4880663	4	· · O-ring		
14	965564	1	· Bracket		
15	946671	1	· Flange screw		
16	965542	1	· Bracket		
17	952636	4	· Clamp		
18	946544	4	· Flange screw		
19	945407	4	· Flange nut		
20	948217	1	· Flange screw		M8x45mm
21	947554	2	Nipple		M26x1,5
22	948885	2	Gasket		