Flexible Engine Suspension: 864317

TAMD61A, TAMD62A, TAMD71A, TAMD71B, TAMD72A, TAMD72P-A, TAMD72WJ-A, TAMD73P-A, TAMD73WJ-A

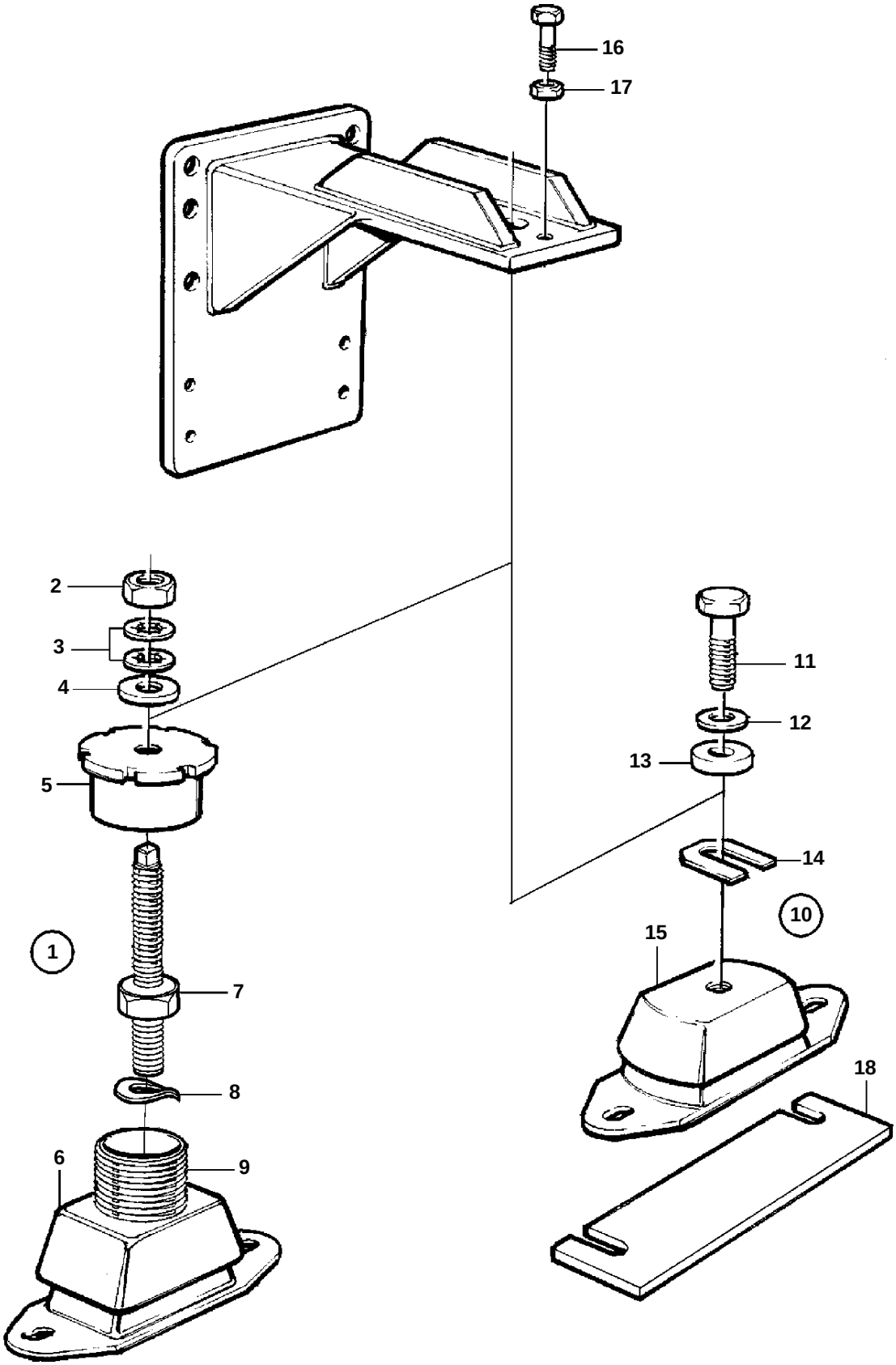

17119

TAMD61A, TAMD62A, TAMD71A, TAMD71B, TAMD72A, TAMD72P-A, TAMD72WJ-A, TAMD73P-A, TAMD73WJ-A

REF	PART NO.	QTY	DESCRIPTION		NOTES
1	864317	4	Rubber element kit		55SH
2	955786	4	· Nut		
3	847766	8	· Lock washer		
4	120224	4	· Washer		
5	863873	4	· Adjusting sleeve		
6		4	· Rubber element		55SH
7	847749	4	· Adjuster screw		
8	941914	4	· Spring washer		
9		4	· Adjusting sleeve		