COMMON

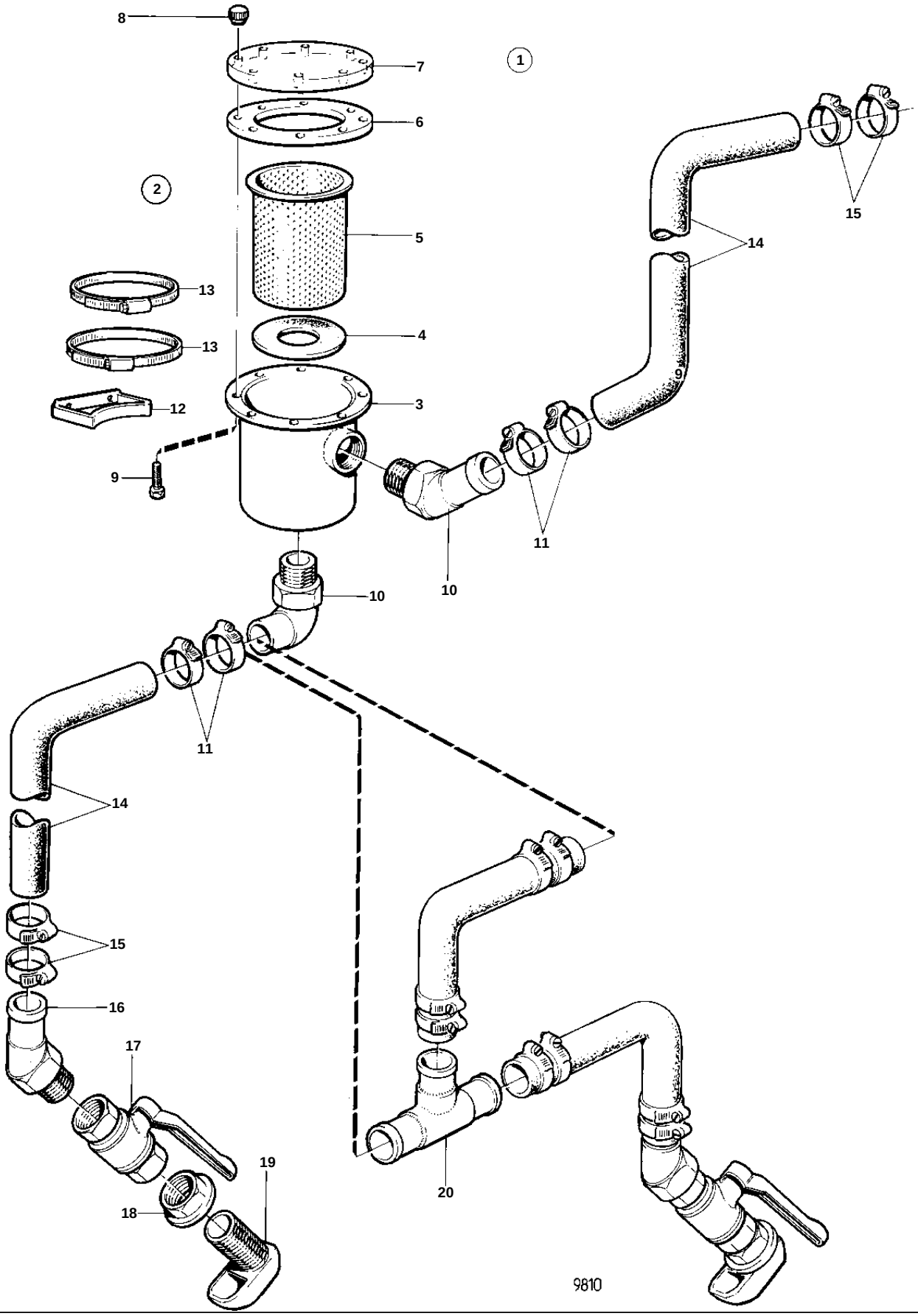

COMMON

REF	PART NO.	QTY	DESCRIPTION		NOTES
1	862199	1	Sea water filter		
2	842466	1	· Filter		
3		1	· · Housing		
4	843361	1	· · Gasket		
5	843358	1	· · Insert		
6	843360	1	· · Gasket		
7	843359	1	· · Cover		
8	843357	8	· · Nut		
9	843362	8	· · Screw		
10		2	· Hose attachment		
11	961672	4	· Clamp		
12	828061	2	· Bracket		
13	961678	2	· Hose clamp		
14	848327	X	Hose		
15	961673	4	Clamp		
16	848420	1	Hose attachment		
17	1140099	1	Ball valve		
18	848323	1	Flange nut		
19	848321	1	Strainer		
20	848669	1	T-pipe		Used when two sea water intake are installed.