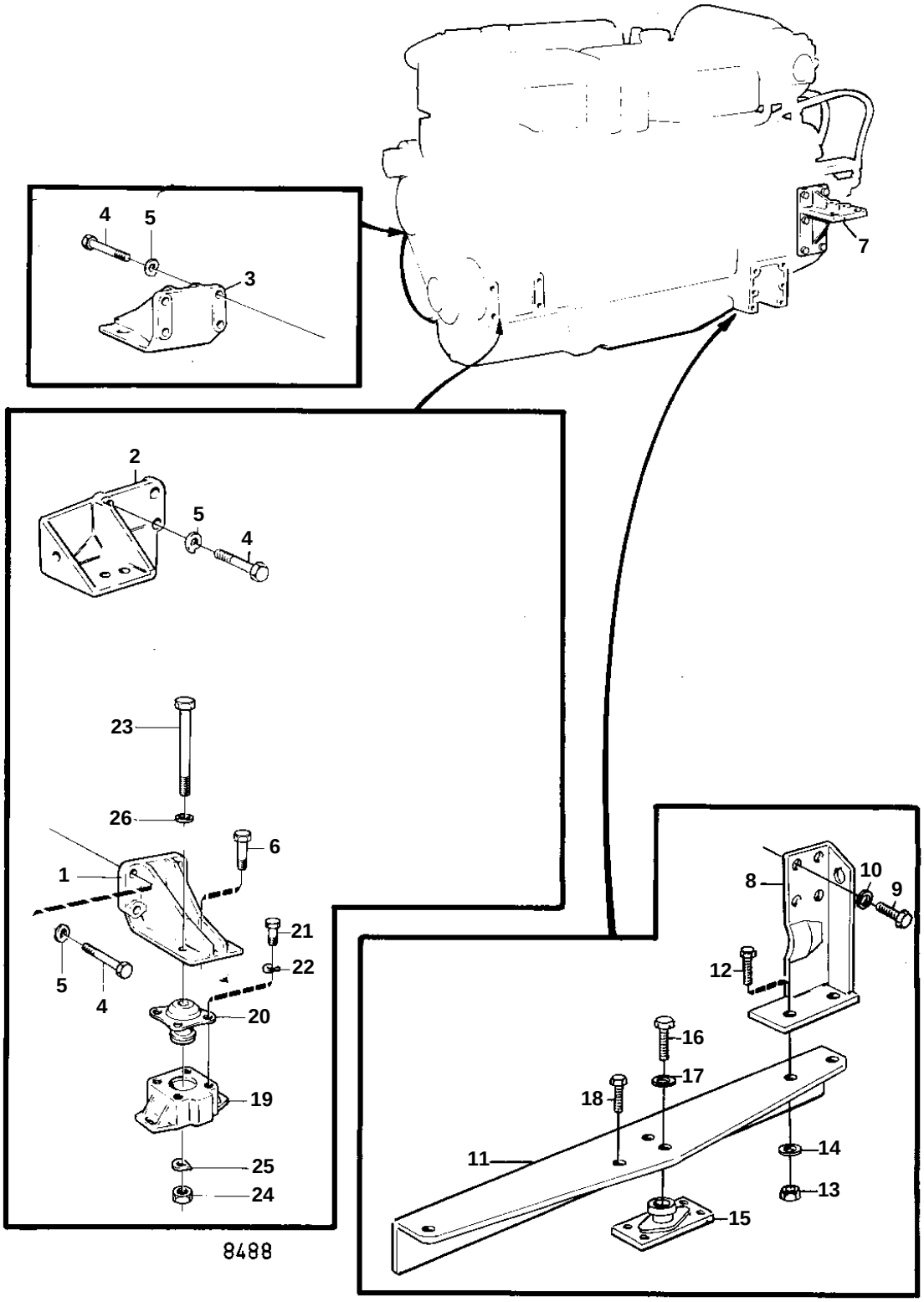
4
5
3
7
2
5
4
23
26
6
1
21
22
5
4
20
19
25
24
8488
8
10
9
12
16
17
18
11
14
13
15

REF	PART NO.	QTY	DESCRIPTION		NOTES
1	848615	1	Bracket		
2	844700	1	Bracket		P. FOR ALTERNATOR 823765 AND 823850.
3	848616	1	Bracket		
4	955567	4	Screw		L = 70 MM
	955565	4	Screw		L = 57 MM
5	940280	8	Spring washer		
6	837717	2	Screw		
7		1	ENGINE MOUNTS MOUNTED ON REVERSE GEAR		SEE GROUP 4A
19	837716	2	Anchorage		
	837716	4	Anchorage		SOFT ENGINE MOUNTS.
20	837826	2	Rubber element		
	837227	4	Rubber element		SOFT ENGINE MOUNTS.
21	955317	8	Screw		
	955317	16	Screw		SOFT ENGINE MOUNTS.
22	941908	8	Spring washer		
	941908	16	Spring washer		SOFT ENGINE MOUNTS.
23	955380	2	Screw		L = 160 MM
	955380	2	Screw		L = 160 MM. SOFT ENGINE MOUNTS.
	955378	2	Screw		L = 140 MM. SOFT ENGINE MOUNTS.
24	955785	2	Nut		
	955785	4	Nut		SOFT ENGINE MOUNTS.
25	941912	2	Spring washer		
	941912	4	Spring washer		SOFT ENGINE MOUNTS.
26	955900	2	Washer		
	955900	4	Washer		SOFT ENGINE MOUNTS.