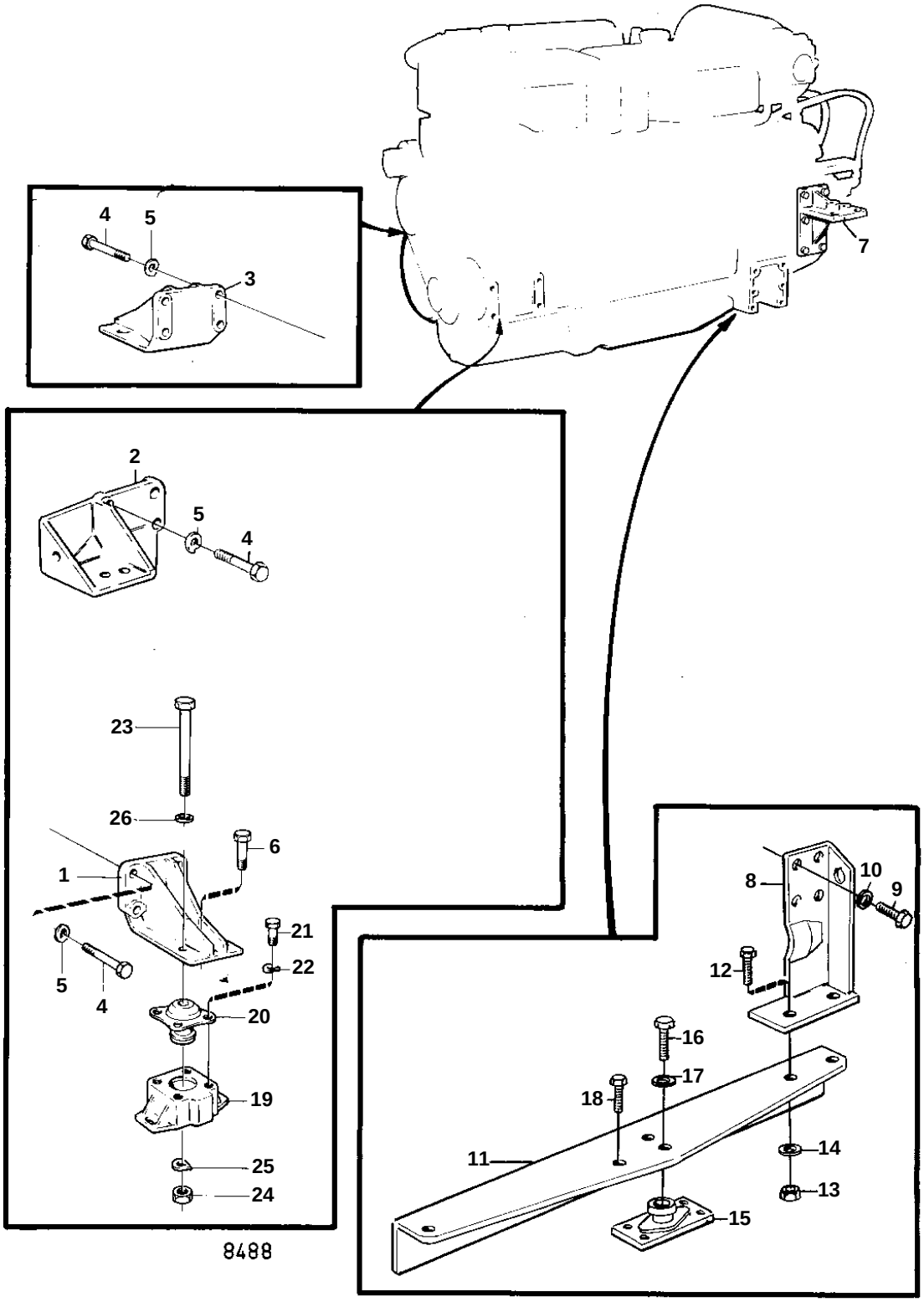
4
5
3
7
2
5
4
23
26
6
1
21
22
5
4
20
19
25
24
8
10
9
12
16
17
18
11
14
13
15
8488

REF	PART NO.	QTY	DESCRIPTION		NOTES
1	848615	1	Bracket		
2	844700	1	Bracket		P. FOR ALTERNATOR 823765 AND 823850.
3	848616	1	Bracket		
4	955567	4	Screw		L = 70 MM
	955565	4	Screw		L = 57 MM
5	940280	8	Spring washer		
6	837717	2	Screw		
8	843222	1	Bracket		S.B
	843223	1	Bracket		P
9	955561	8	Screw		
10	940280	8	Spring washer		
11	836382	1	Frame		S.B
	836383	1	Engine suspens frame		P
12	955590	8	Screw		
13	955829	8	Nut		
14	941912	8	Spring washer		
15	836649	2	Rubber cushion		
16	955589	2	Screw		
	955363	2	Screw		ALT
17	941912	2	Spring washer		
18	955343	2	Screw		