TAMD63L-A, TAMD63L-B, TAMD63P-A

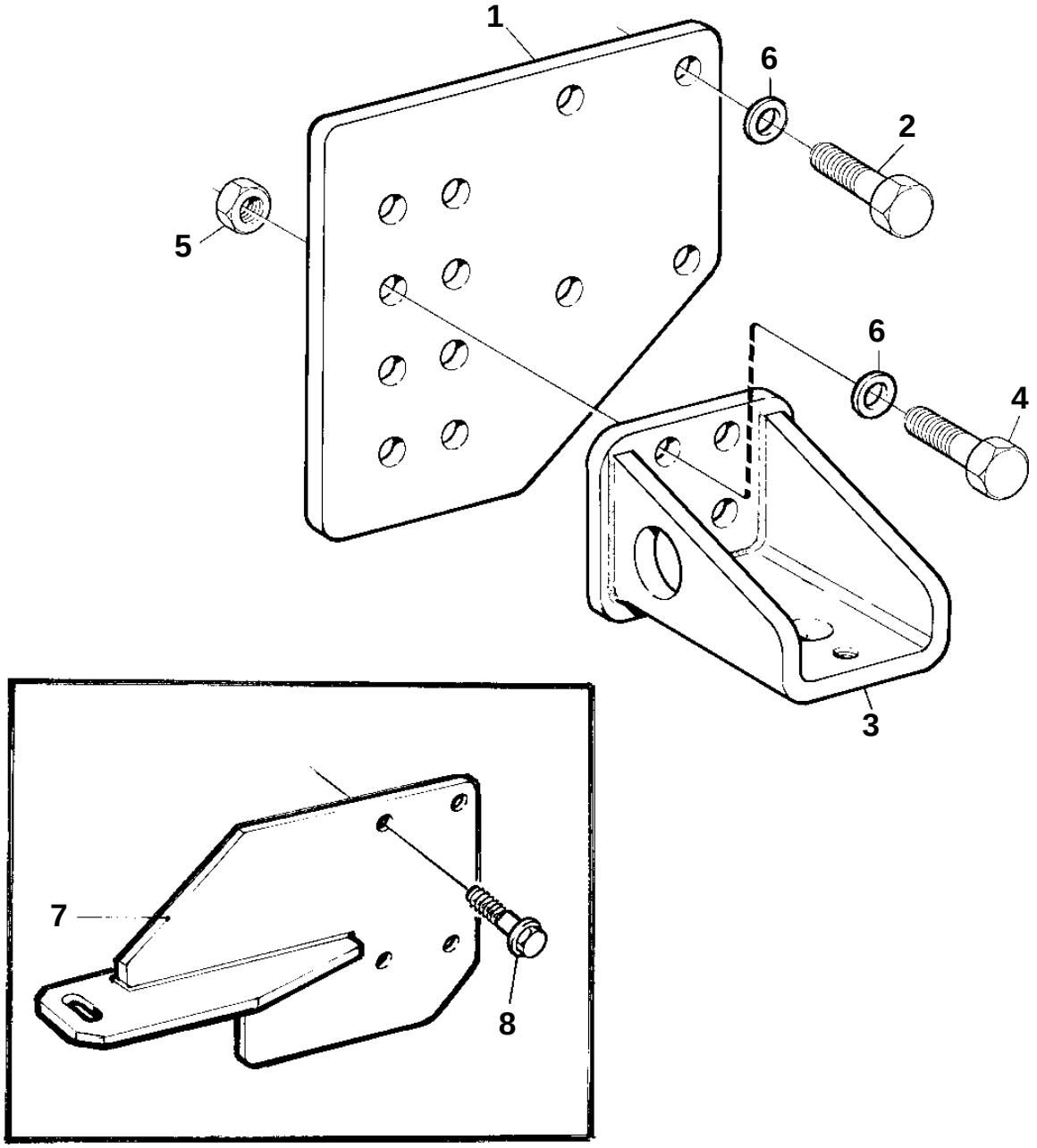

15928

TAMD63L-A, TAMD63L-B, TAMD63P-A

REF	PART NO.	QTY	DESCRIPTION		NOTES
1	849287	2	Bracket		28
2	970900	8	Screw		
3	848369	2	Bracket		28
4	970900	8	Screw		
5	963108	8	Nut		
6	940280	8	Spring washer		
7	3825544	1	Engine bracket		SB, 22,5
	3825545	1	Engine bracket		P,22,5
8	965225	8	Flange screw		M12x35mm