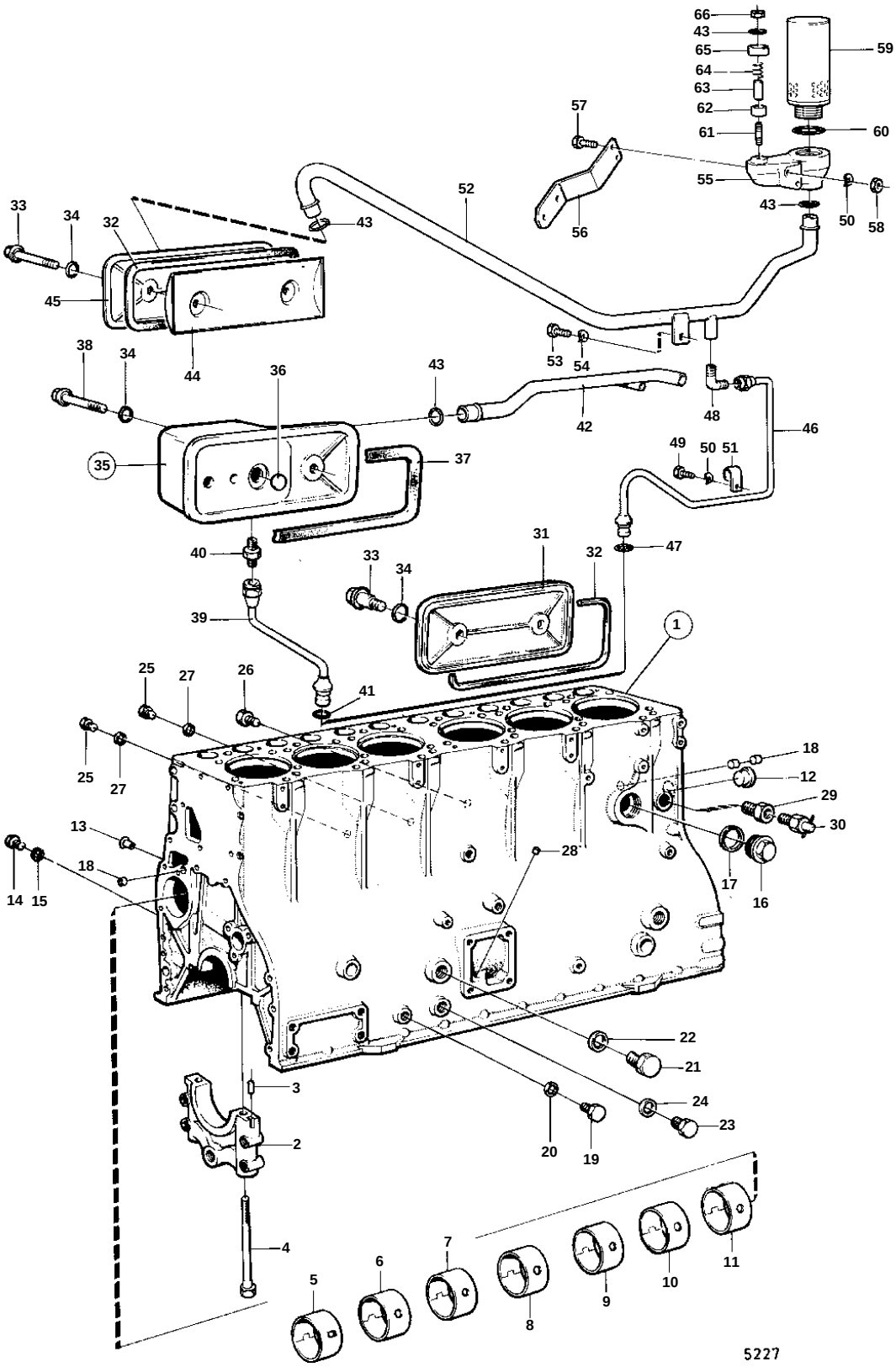
66
43
65
64
63
62
61
59
60
57
55
56
52
43
50
58
33
34
32
45
44
38
34
36
43
53
54
42
48
46
35
37
49
50
51
40
33
34
31
32
47
39
1
25
27
26
41
25
27
18
12
29
30
13
18
14
15
28
17
16
22
21
3
24
23
2
20
19
4
5
6
7
8
9
10
11
5227

REF	PART NO.	QTY	DESCRIPTION		NOTES
1	465160	1	Cylinder block		MO-47363/XXXXX. ERS AV 1 ST 465720 , 1 ST 275740
2		7	· BEARING CAP		
3	422426	1	· Pin		
4	421153	14	· Screw		
5	422076	1	· Bushing		
6	422077	1	· Bushing		
7	422078	1	· Bushing		
8	422079	1	· Bushing		
9	422080	1	· Bushing		
10	422081	1	· Bushing		
11	422082	1	· Bushing		
12	192211	1	· Plug		
13	422369	7	· Plug		
14	190798	1	· Plug		
15	18818	1	· Gasket		
16	825815	1	Plug		
17	469328	1	Gasket	IK	
18	955082	3	Cap plug		
19	191025	1	Plug		
20	957178	1	Gasket		
21	192114	1	Plug		
22	957185	1	Gasket	IK	
23	190798	1	Plug		
24	18818	1	Gasket	IK	
25	16318	3	Plug		
26	952077	1	Plug		(192154)
27	907132	3	Gasket		
28	955082	1	Cap plug		
29	190130	1	Nipple		
30	87502	1	Tap		
31	420120	1	Inspection cover		
32	421121	1	Gasket		
33	422541	3	Screw		
34	424342	4	Sealing ring		
35	842259	1	Crankcase ventilatio		
36	192211	1	· Plug		
37	824381	1	Gasket	IK	
38	823742	1	Screw		
39	842269	1	Oil pipe		
40	954335	1	Fitting		
41	955983	1	O-ring	IK	
42	842210	1	Tube		
43	421158	1	Sealing ring	IK	

REF	PART NO.	QTY	DESCRIPTION		NOTES