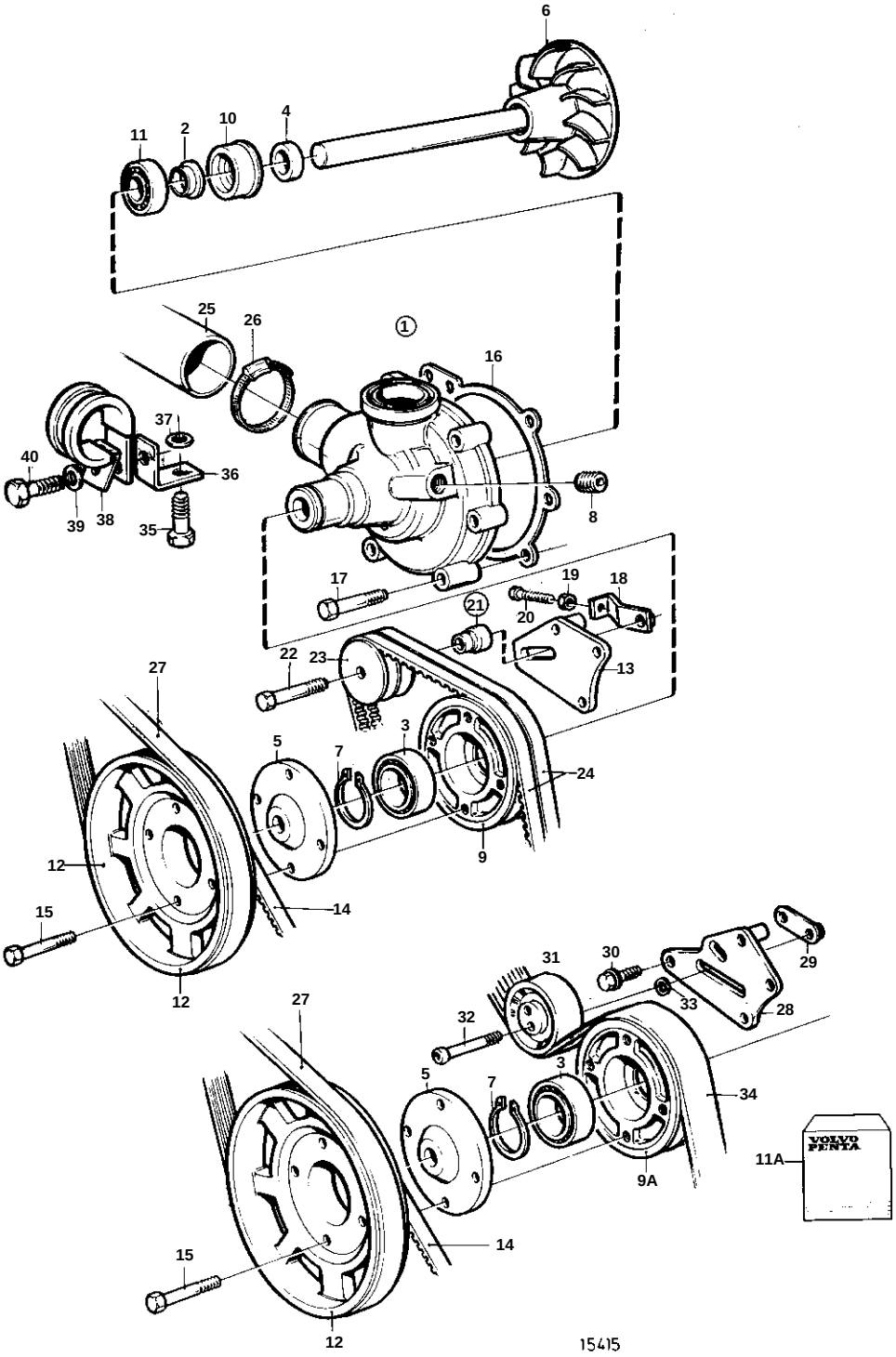
6
11
2
10
4
25
26
1
16
37
40
36
39
38
35
8
17
19
18
21
20
22
23
13
27
5
7
3
24
9
12
15
14
12
31
30
29
33
28
27
32
5
3
7
34
11A
9A
15
14
12
15415

REF	PART NO.	QTY	DESCRIPTION		NOTES
1	860452	1	Water pump		SN-2204208023. For V-belt
	861549	1	Water pump		SN2204208024-. For multi-V-belt.
2	70913	1	· Deflector		Included in overhaul kit.
3	181538	1	· Ball bearing		Included in overhaul kit.
4	421306	1	· Wear ring		Included in overhaul kit.
5	860455	1	· Hub		
6		1	· Shaftwith blade wheel		Included in overhaul kit.
7	914462	1	· Lock ring		Included in overhaul kit.
8	479977	1	· Plug		(952077)
9	1542235	1	· Pulley		FOR 860452. For V-belt
					SN-2204208023
9A	861541	1	· Pulley		FOR 861549. For multi-V-belt.
					SN2204208024-
10	1545283	1	· Sealing ring		Included in overhaul kit.
11	1660609	1	· Ball bearing		Included in overhaul kit.
11A	876544	1	Repair kit		SEE GROUP 99
12	860454	1	Pulley		
13	860610	1	Bracket		
14	977542	1	V-belt		
15	947760	4	Flange screw		
16	859027	1	Gasket		Included in overhaul kit.
17	947760	6	Flange screw		
18	860658	1	Tensioner		M6, SN-2204207319
					REPLACED BY 861672
	861672	1	Tensioner		M8, SN2204207320-
19	945407	1	Flange nut		M6, SN-2204207319
	968862	1	Nut		M8, SN2204207320-
20	1328811	1	Screw		M6, SN-2204207319
	860928	1	Screw		M8, SN2204207320-
21	876562	1	Mounting kit		
22	965187	1	· Screw		
23	861557	1	Tension pulley		(860714). For V-belt
24	976483	1	V-belt kit, V-belt		
25	861112	1	Hose		Heat exchanger-expansion tank-water pump.
26	943477	1	Hose clamp		
27	860388	1	Drive belt		
28	861560	1	Bracket		
29	861652	1	Lock washer		
30	946441	1	Screw		
31	861563	1	Tension pulley		For multi-V-belt.
32	959245	1	Screw		
33	960144	1	Washer		
34	861564	1	Drive belt, multi-V		
35			Screw		SEE GROUP 22