Flexible Engine Suspension for Reverse Gear MPM IRM350A and Twin Disc MG5114A: MPM IRM350A

TAMD165P-A

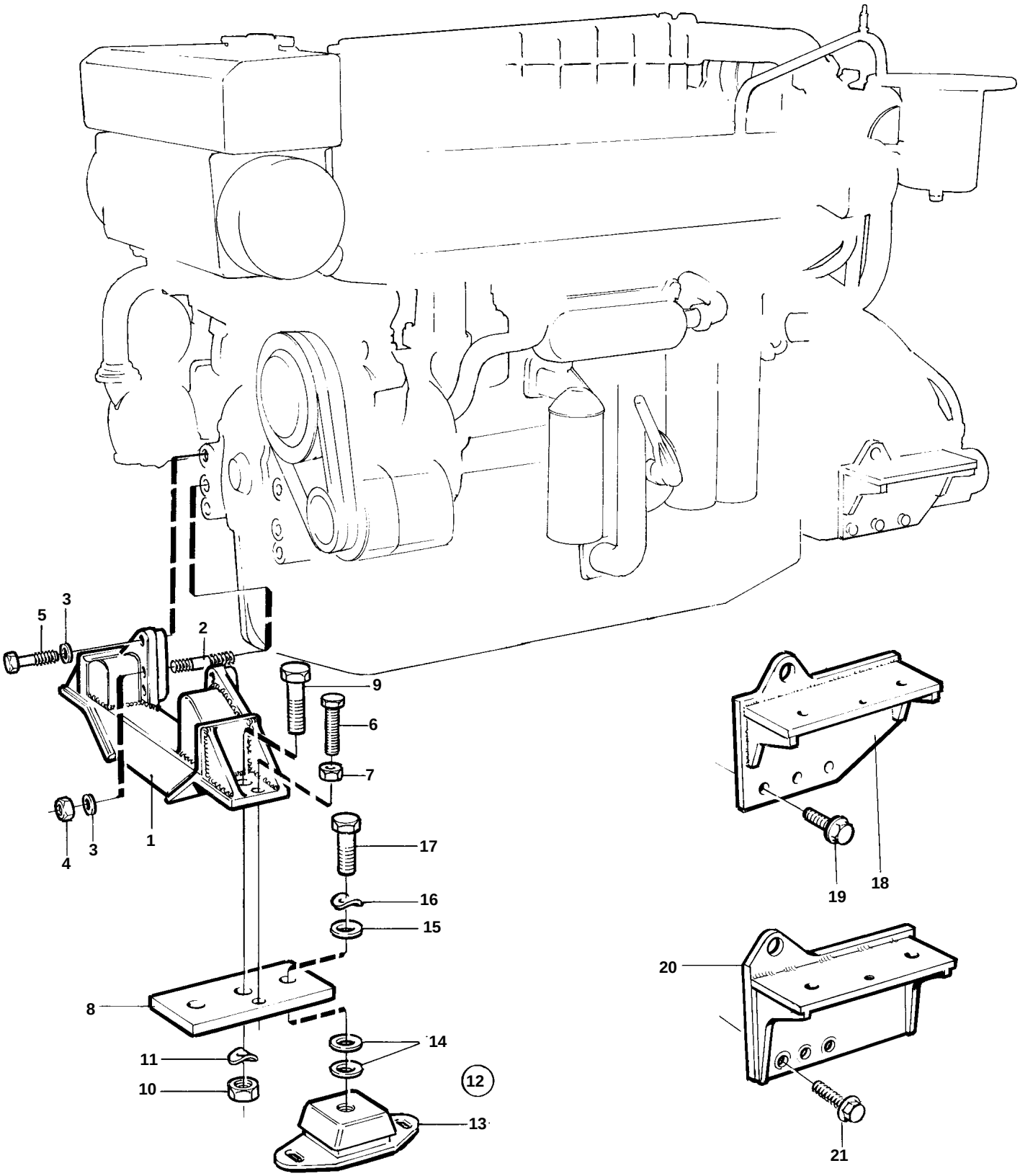

16351

TAMD165P-A

REF	PART NO.	QTY	DESCRIPTION		NOTES
1	866935	1	Engine bracket	SO	
2	973202	5	Stud		
3	941911	6	Spring washer		
4	961994	5	Nut		
5	971006	1	Screw		
6	977987	X	Adjuster screw		
7	971072	2	Nut		
8	3825215	2	Bracket		
9	963357	2	Screw		
10	955787	2	Nut		
11	941916	4	Spring washer		
12		1	Rubber cushionkit		
13	3828247	8	· Rubber cushion		
14	849953	16	· Spacer		TH = O,5mm
	849954	16	· Spacer		TH = 1,0mm
	849955	16	· Spacer		TH=3,0mm
15	863273	8	· Washer		
16	941914	8	· Spring washer		
17	955390	8	· Screw		
18	3825061	1	Bracket	SO	P
	3825062	1	Bracket, oil cooler-rev.gear	SO	S.B
19	968436	12	Flange screw		