TAMD165C-A, TAMD165A-A

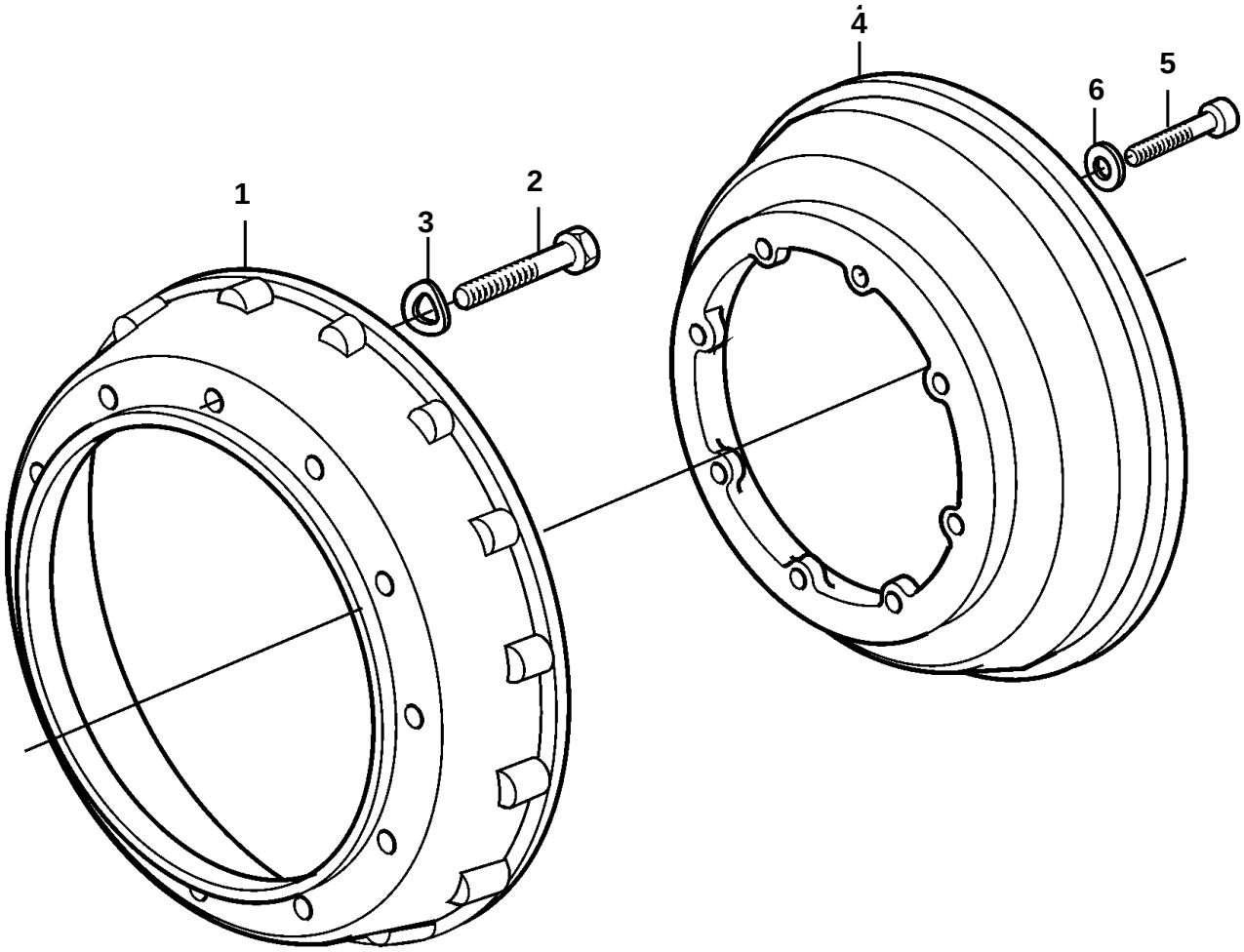

18236

TAMD165C-A, TAMD165A-A

REF	PART NO.	QTY	DESCRIPTION		NOTES
1	3826138	1	Adapter, flywheel cover	SO	From SAE 1 to SAE 0.
2	940134	12	Screw		
3	941909	12	Spring washer		
4	3826137	1	Adapter, flywheel		From SAE 1 to SAE 0.
5	956621	8	Allen head screw		
6	968161	8	Washer		