TAMD163A-A

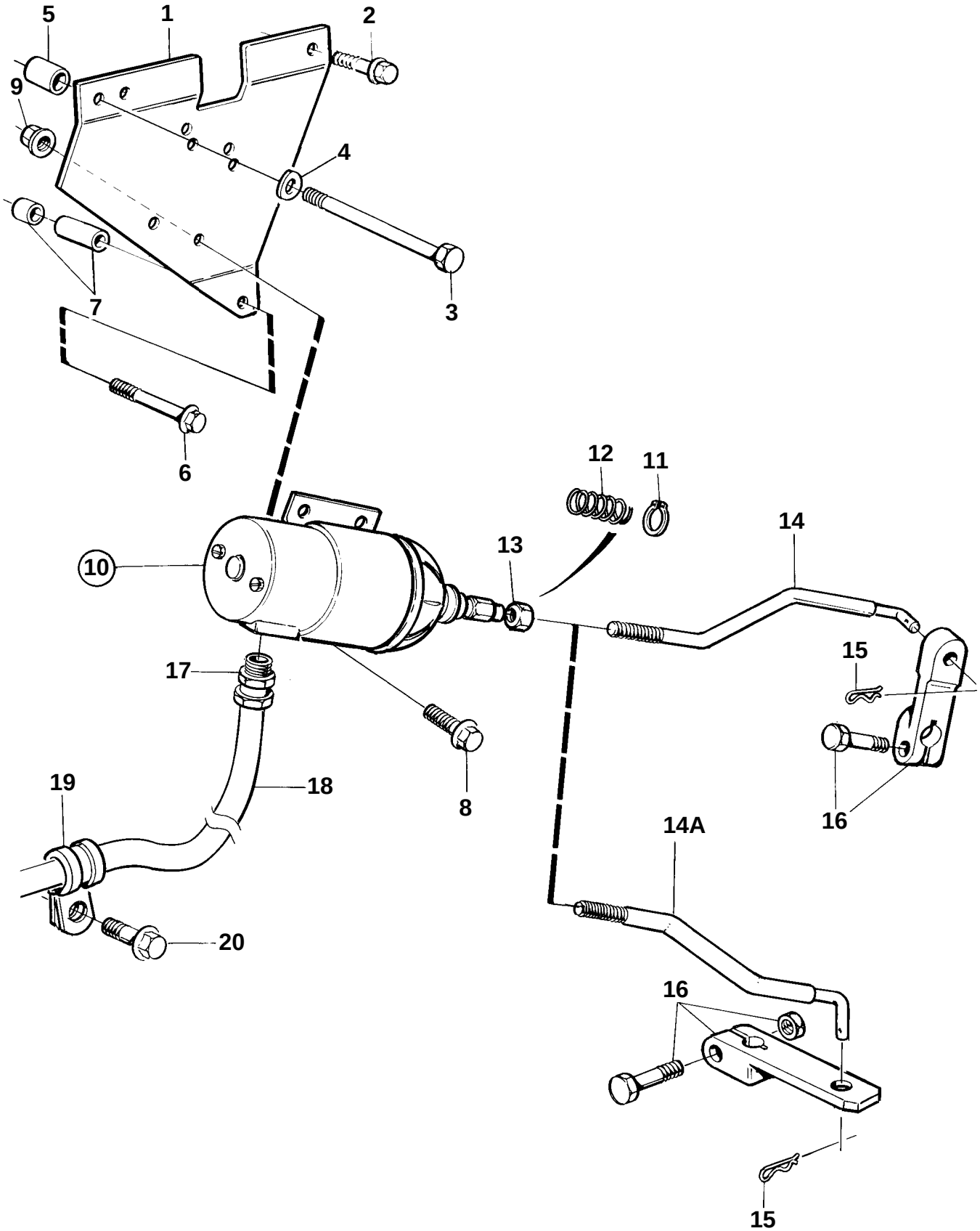

TAMD163A-A

REF	PART NO.	QTY	DESCRIPTION		NOTES
1	849456	1	Bracket		
2	946173	1	Flange screw		
3	968303	1	Screw		
4	941907	1	Spring washer		
5	849095	1	Sleeve		L=16mm
6	965182	1	Flange screw		
7	821539	1	Spacer sleeve		L=14mm, ALT
	821541	1	Sleeve		L=37mm
8	946440	4	Flange screw		
9	945408	4	Flange nut		
10	872825	1	Stop solenoid, 5/16"-UNF		
11	914456	1	· Lock ring		
12	847333	1	Return spring		TH=2,0mm
13	955857	1	Nut		
14A	3826105	1	Pull rod		
15	907824	1	Cotter pin		
16		1	Connectorfuel inj. pump		SEE GROUP 23
17	844576	1	Cable union		