Expansion Tank for Keel Cooling: SN-XXXXXXXXXX/24314

TAMD162C-B

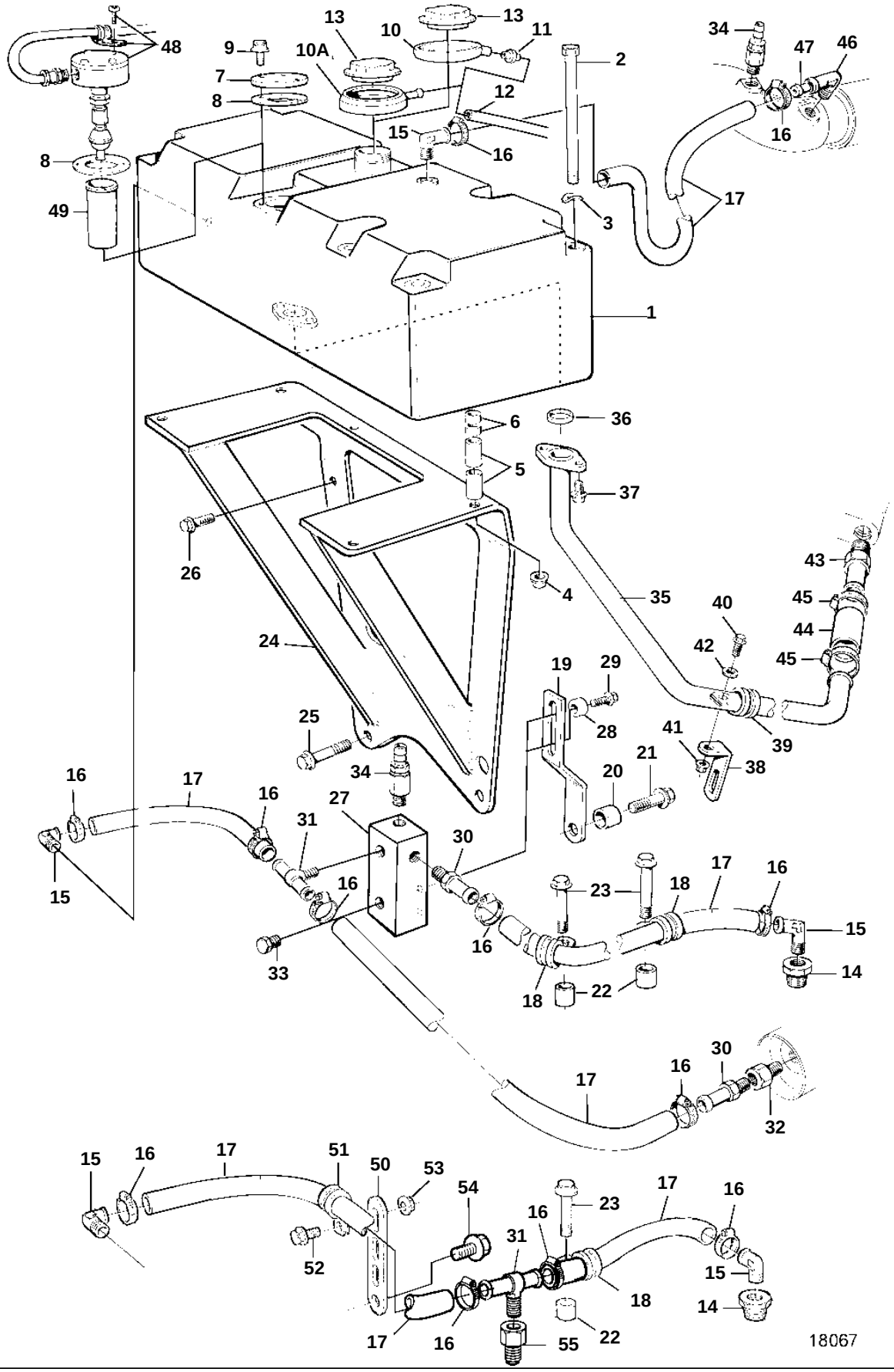

TAMD162C-B

REF	PART NO.	QTY	DESCRIPTION		SEE SEC.	NOTES
1	866767	1	Expansion tank			
2	973253	4	Screw			
3	941908	4	Spring washer			
4	971095	4	Nut			
5	845884	4	Spacer sleeve			
6	842930	4	Spacer sleeve			
7	843760	1	Cover			
8	863715	1	Gasket			
9	965199	4	Screw			
10	1196982	1	Seal			SN-1101052283/XXXXX
10A	11033334	1	Collar			SN1101052284/XXXXX-
11		1	Nipple			SN-1101052283/XXXXX
12	192618	X	Hose			L=1100mm
13	1674083	1	Pressure cap			
14	479954	1	Nipple, exhaust manifold			
15	942758	3	Nipple			
16	943470	8	Hose clamp			
17	943367	X	Hose			
18	949747	2	Clamp			
19	836348	1	Bracket			
20	829653	1	Spacer sleeve			
21	965186	1	Flange screw			
22	820506	2	Spacer sleeve			
23	965184	2	Screw			
24	862548	1	Bracket			
25	965189	4	Flange screw			
26	973924	1	Flange screw			(965179)
27	866704	1	Bracket			
28	807183	2	Spacer sleeve			
29	947542	2	Screw			
30	942722	2	Nipple			
31	948092	1	Nipple			
32	862109	1	Nipple, collecting pipe			
33	479979	1	Plug			
34	966871	2	Tap			
35	3825521	1	Coolant pipe			
36	862637	1	Gasket			
37	946173	2	Flange screw			
38	965555	1	Bracket, timing gear cover			
39	952634	1	Clamp			
40	946934	1	Flange screw			
41	949278	1	Lock nut			
42	960140	1	Washer			
43	941845	1	Nipple, water pump			
44	944386	X	Hose			L=60mm
45	961667	2	Hose clamp			
46	479953	1	Elbow nipple			(180283)
47	865754	1	Orifice sleeve			
48		1	Level sensor		2682	
49		1	Splash pipe		2682	