EXHAUST MANIFOLD AND INSTALLATION COMPONENTS: AQD70CL

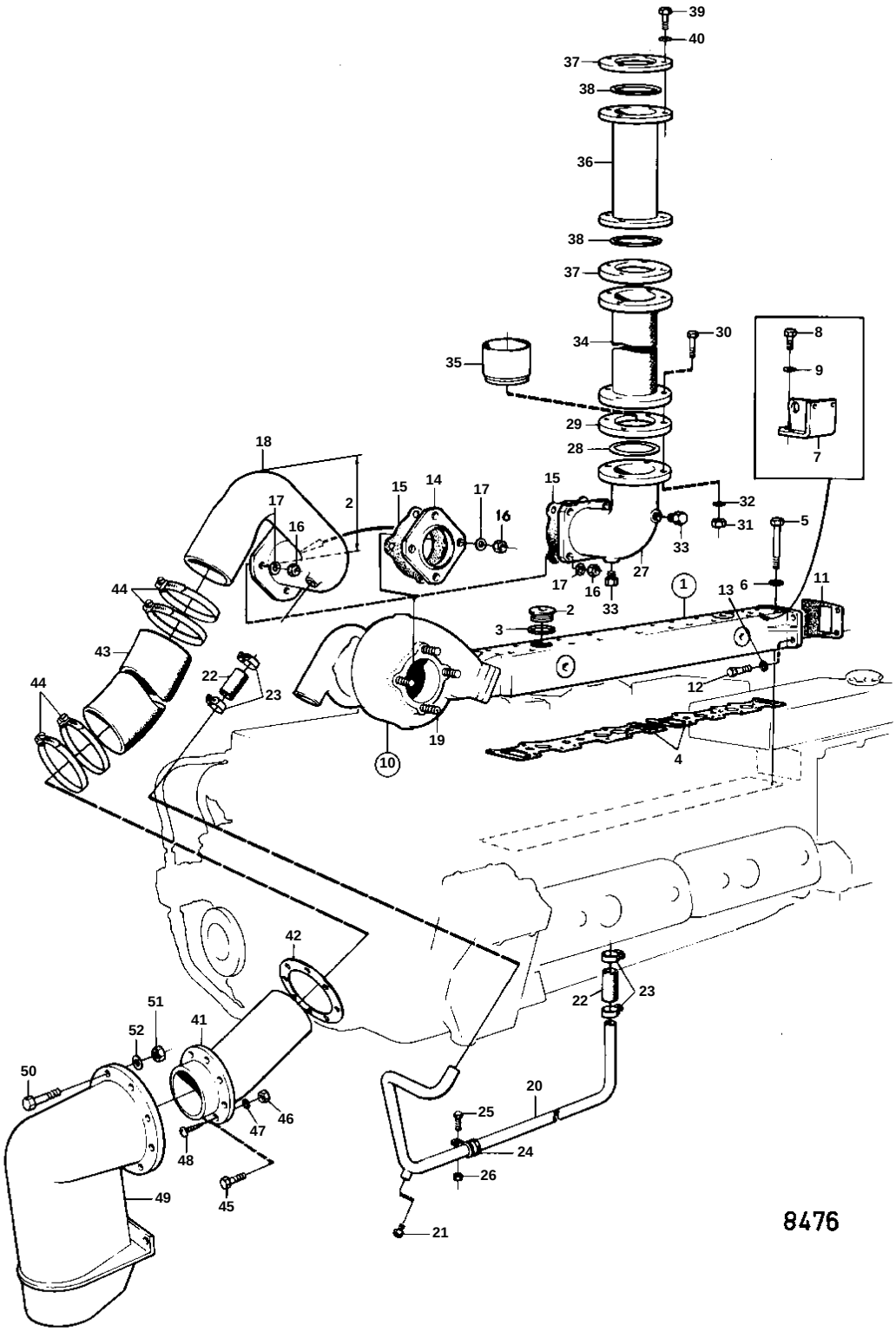

REF	PART NO.	QTY	DESCRIPTION		SEE SEC.	NOTES
1	836371	1	Exhaust pipe			
2	467367	6	· Plug			
3	469328	6	· Gasket	IK		
4	842531	2	Gasket	IK		
5	955544	6	Screw			L = 102 MM
	942268	2	Screw			L = 127 MM
	943254	12	Screw			L = 120 MM
6	942336	20	Spring washer			
7	836385	1	Bracket			
8	940115	1	Screw			L = 25 MM
9	942336	1	Spring washer			
10		1	TURBO		02B-1700	
11	836820	1	Gasket	IK	02B-0650	
12	940160	4	Screw		02B-0650	
13	941909	4	Spring washer		02B-0650	
15	424631	1	Gasket			
16	943927	4	Nut			
17	941908	4	Spring washer			
18	837870	1	Riser			Z = 195 MM
19	924079	4	Stud			
20	837873	1	Tube		02B-0350	
21	192134	1	Plug			
22	941799	X	Hose			L = 65 MM
23	943476	4	Hose clamp			
24	943717	2	Clamp			
25	950060	2	Screw			
26	955826	2	Nut			
36	843087	1	Compensator			L = 85 MM
	843088	1	Compensator			L = 185 MM
37	820905	2	Connection flange			
38	862594	2	Gasket			
39	955591	8	Screw			EARLY TYPE
	955365	8	Screw			LATE TYPE
40	941912	8	Spring washer			
41	836757	1	Hull fitting			
42	836758	1	Gasket			
43	828489	X	Exhaust hose			
44	943485	4	Clamp			
45	941815	8	Screw			ALT L = 45 MM
46	940190	8	Nut			ALT
47	836768	8	Washer			ALT
48	836769	8	Wood screw			ALT L = 38 MM
49	836823	1	Muffler			
50	959942	16	Screw			
51	940190	16	Nut			
52	940191	16	Washer			
		1	EXHAUST SYSTEM FOR TWIN INSTALLATION		02B-2750	