ALTERNATOR AND INSTALLATION COMPONENTS 12V38A, 24V25A: TMD70B

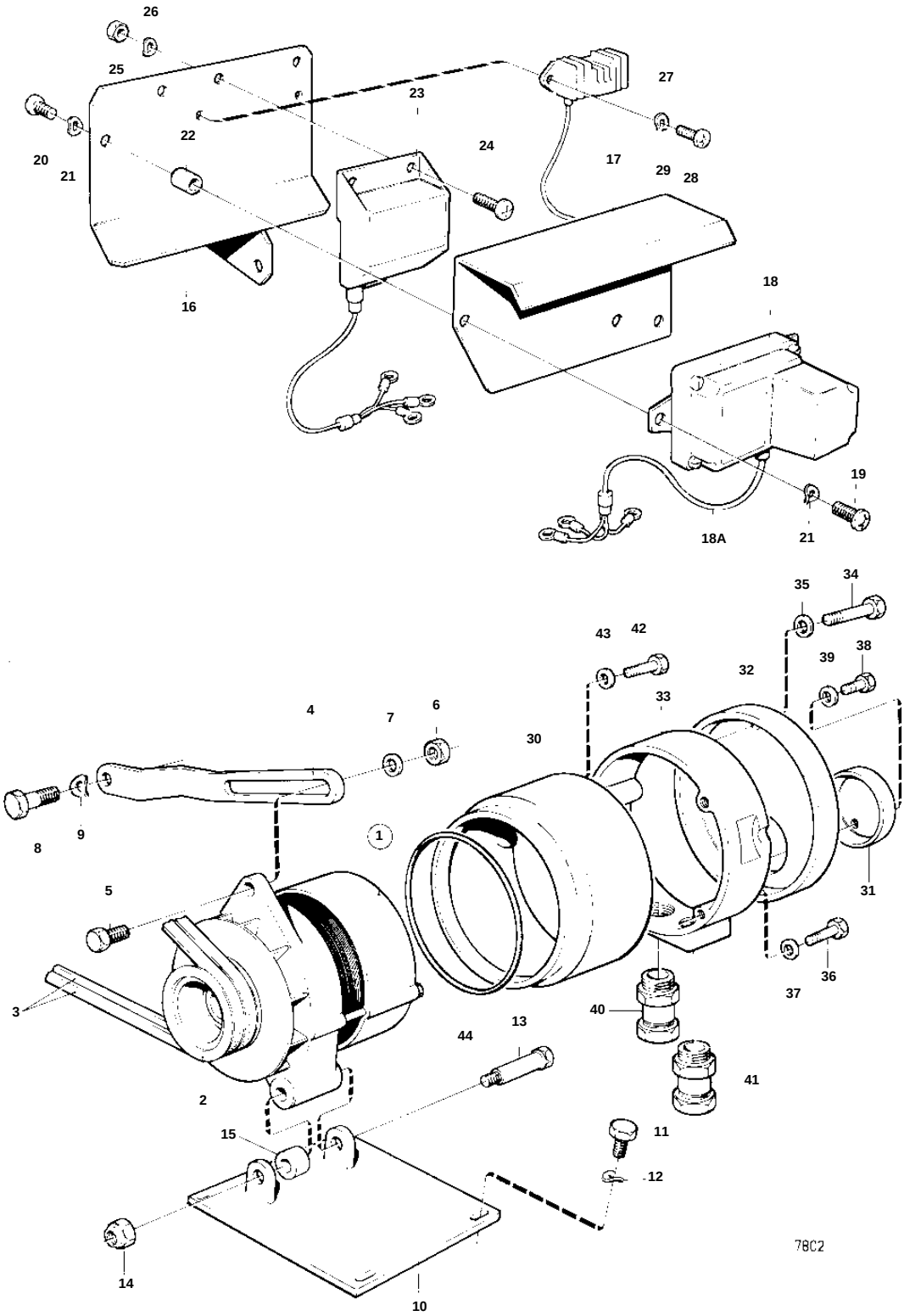

REF	PART NO.	QTY	DESCRIPTION		SEE SEC.	NOTES
1	827348	1	Alternator			12V38A REPL BY 847604
					030-1250	
	847604	1	Alternator			14V35A
					030-1340	
	827349	1	Alternator			24V25A REPL BY 847561
					030-1250	
	847561	1	Alternator			28V30A
					030-1340	
2	822573	1	Pulley			FOR ALTERNATOR 827348 AND 827349
	841812	1	Pulley			FOR GENERATOR 847604 AND 847561
3	958354	1	V-belt set			
4	823137	1	Tensioner			
5	940161	1	Screw			
6	950353	1	Lock nut			
7	191172	1	Washer			
8	940161	1	Screw			
9	941907	1	Spring washer			
10	823136	1	Bracket			
11	940135	4	Screw			
12	941907	4	Spring washer			
13	822580	1	Screw			
14	950355	1	Nut			
15	912151	1	Spacer ring			
16	821429	1	Bracket			EXCLUDING CLASSIFIED ENGINE
17	823649	1	Protecting plate			EXCLUDING CLASSIFIED ENGINE
18	4803292	1	Charge regulator			24V. EXCLUDING CLASSIFIED ENGINE
19	956092	3	Screw			EXCLUDING CLASSIFIED ENGINE
20	956091	3	Screw			EXCLUDING CLASSIFIED ENGINE
21	941906	6	Spring washer			EXCLUDING CLASSIFIED ENGINE
22	899709	3	Vibration damper			EXCLUDING CLASSIFIED ENGINE
23	847605	1	Regulator			12V MO-XXXX/26391
24	950033	3	Screw			
25	940145	3	Nut			
26	941906	3	Spring washer			
27	847605	1	Regulator			12V MOXXXX/26392-
28	956076	2	Screw			
29	941907	2	Spring washer			