CONTROL MECHANISM: 851601

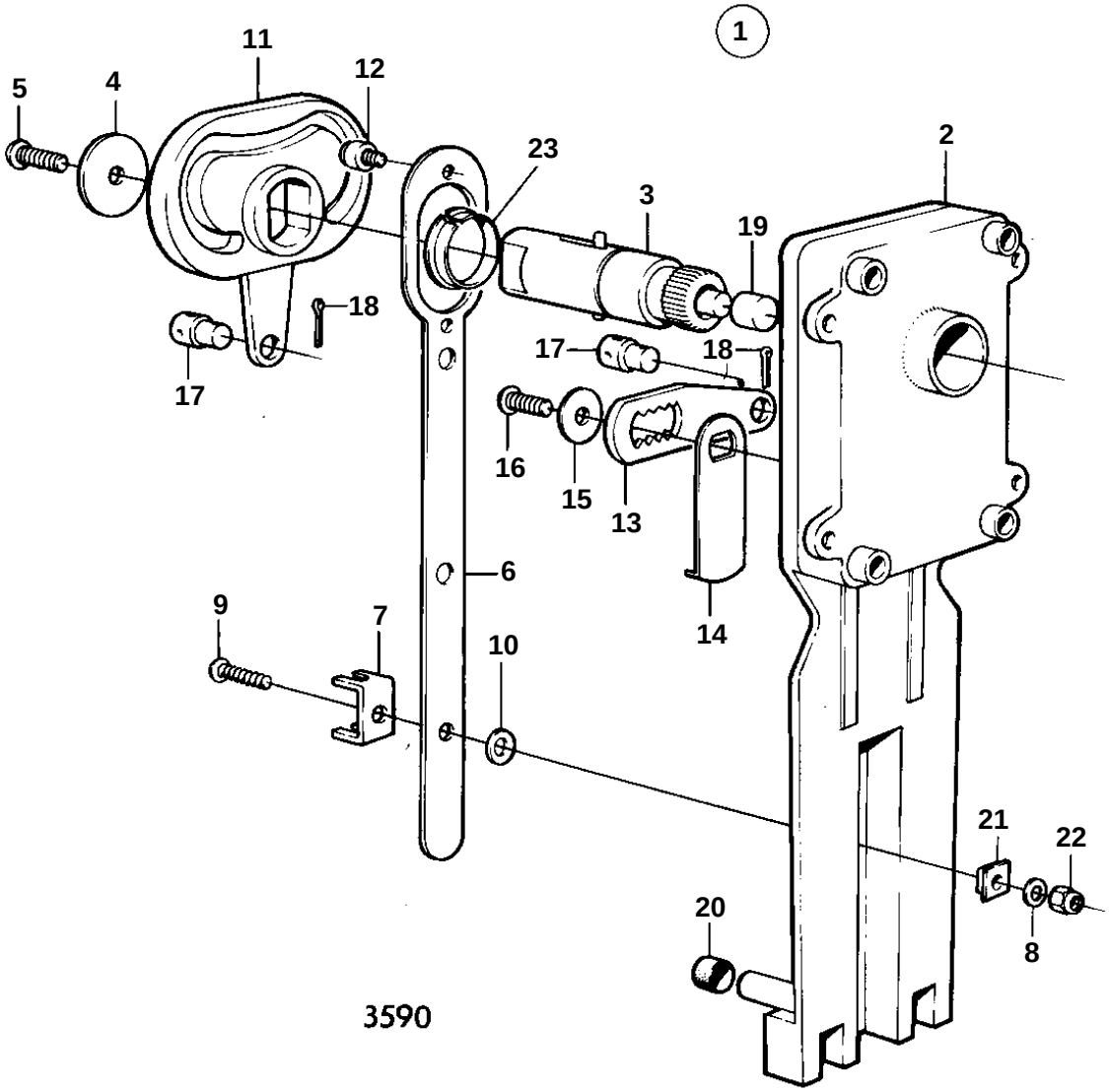

REF	PART NO.	QTY	DESCRIPTION		NOTES
1	851601	1	Control		LATE TYPE. FOR SIDE-MOUNTING.
			COMPONENTS		