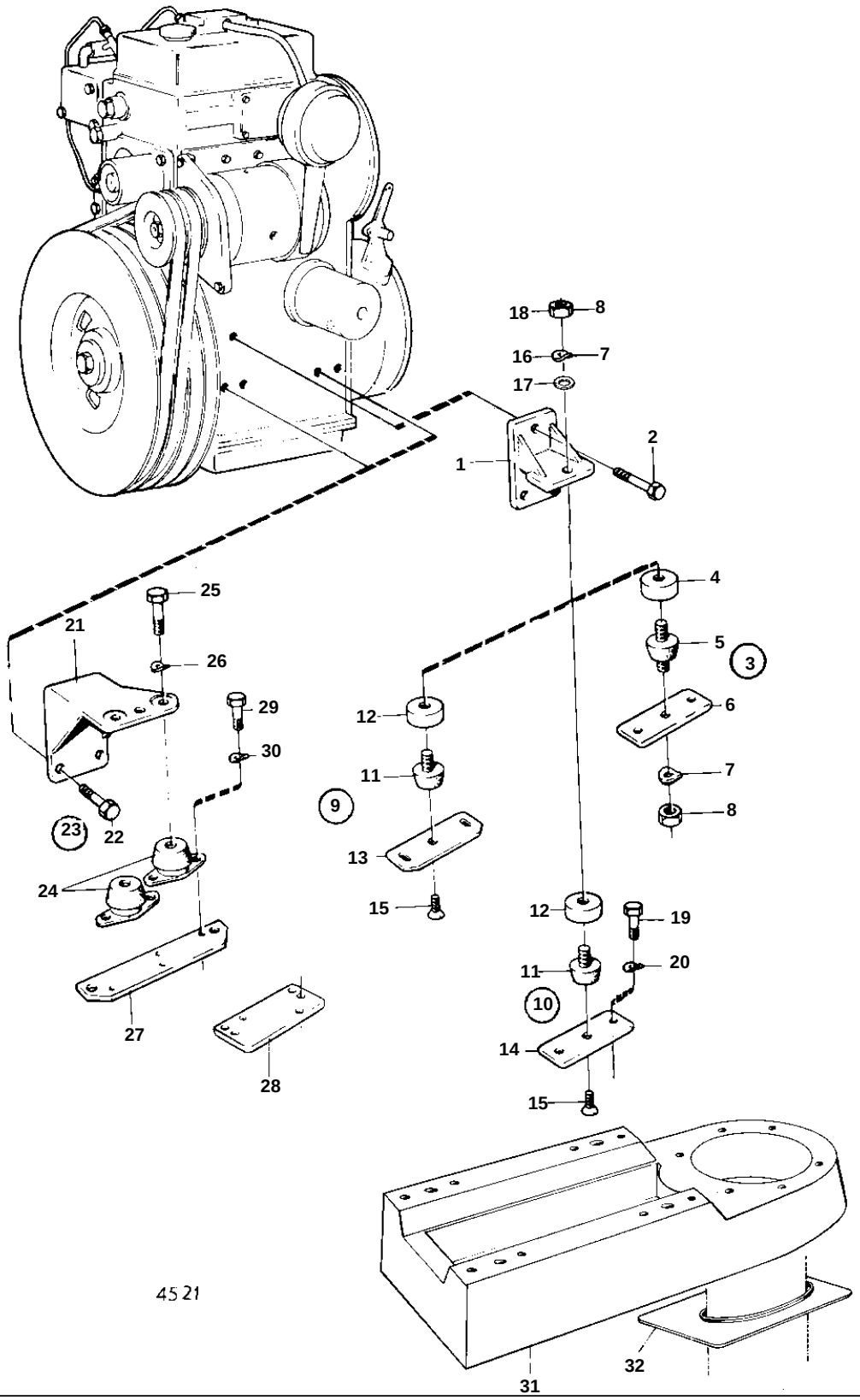
18
8
16
7
17
2
1
4
25
21
5
3
26
29
12
6
30
11
7
9
8
23
22
13
24
15
12
19
11
20
10
27
14
28
15
4521
32
31

REF	PART NO.	QTY	DESCRIPTION		NOTES
1	3875369	4	Bracket		EXCL MD6/COMBI, MD7/COMBI.
2	955317	12	Screw		EXCL MD6/COMBI, MD7/COMBI.
9		1	RUBBER MOUNT		EXCL MD6/COMBI, MD7/COMBI.. EXCL MD7B USA SPEC 867695.. EXCL MD7B/USA SPEC 867663.
11	833950	4	· Rubber cushion		
12	807228	4	· Sleeve		
13	833948	4	· Attaching plate		
15	947936	4	· Screw		
16	940280	4	· Spring washer		
18	955850	4	· Nut		
21	3876897	2	Bracket		P. MD6/COMBI, MD7/COMBI.
	3876898	2	Bracket		S.B. MD6/COMBI, MD7/COMBI.
22	955317	12	Screw		MD6/COMBI, MD7/COMBI.
23	840227	1	Screw		MD6/COMBI, MD7/COMBI.
24	840023	6	· Rubber cushion		MD6/COMBI, MD7/COMBI.
25	955707	6	· Screw		MD6/COMBI, MD7/COMBI.
26	940280	6	· Spring washer		MD6/COMBI, MD7/COMBI.
27	840229	2	· Plate		FRONT. MD6/COMBI, MD7/COMBI.
28	840230	2	· Plate		REAR. MD6/COMBI, MD7/COMBI.
29	940199	12	· Screw		MD6/COMBI, MD7/COMBI.
30	941907	12	· Spring washer		MD6/COMBI, MD7/COMBI.