MD7

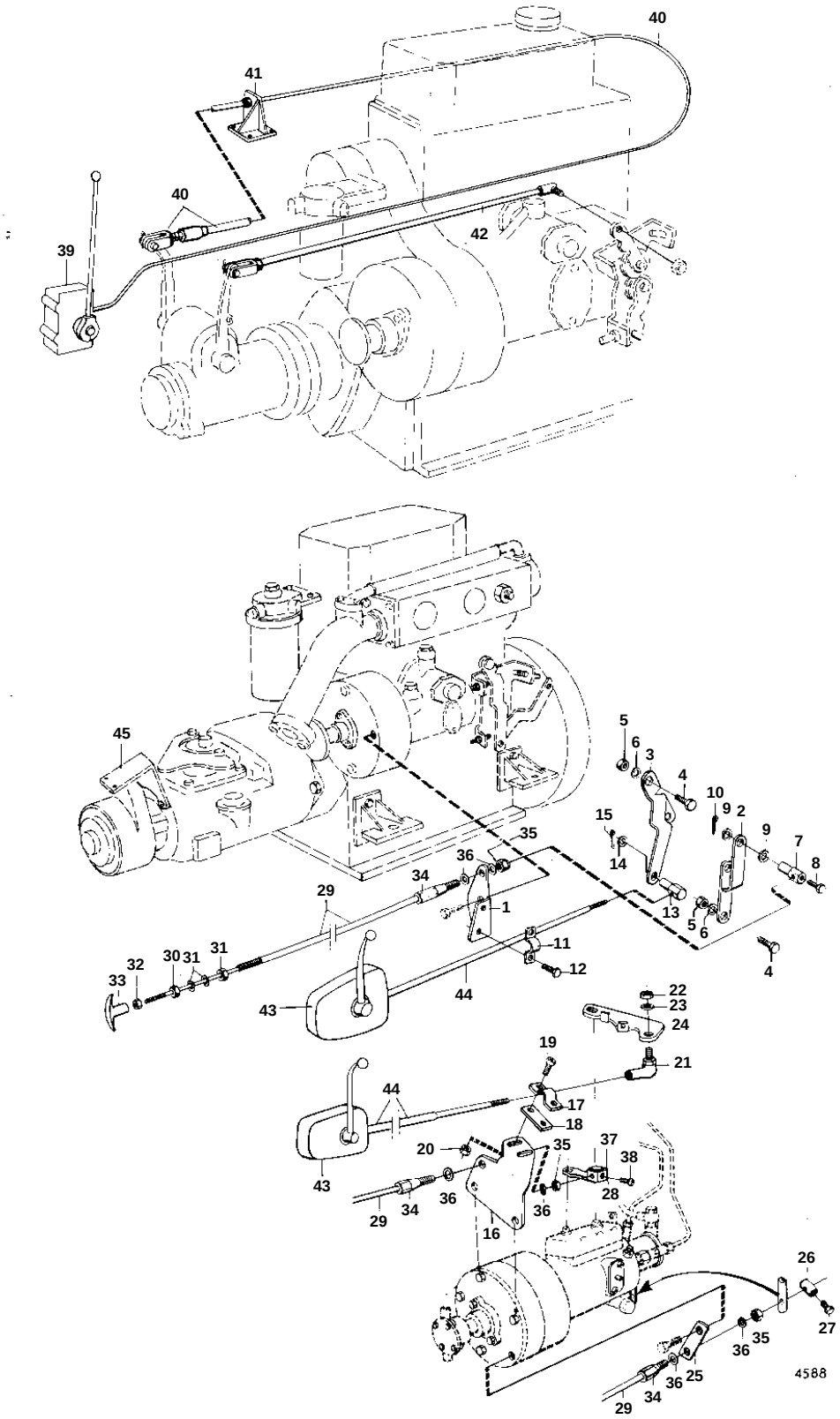
40
41
40
39
42
45
5
6
3
4
10
9
2
15
9
7
8
14
35
36
34
29
1
13
5
6
11
12
4
32
30
31
31
33
43
44
22
23
24
19
21
44
17
18
20
35
37
38
43
28
29
34
36
36
16
26
27
36
35
36
25
34
29
4588

MD7

REF	PART NO.	QTY	DESCRIPTION		NOTES
1	840087	1	Anchorage		EXCL MD7 SPEC 867417, 867418, 867419.
2	840085	1	Lever		EXCL MD7 SPEC 867417, 867418, 867419.
3	840084	1	Lever		EXCL MD7 SPEC 867417, 867418, 867419.
4	955270	2	Screw		EXCL MD7 SPEC 867417, 867418, 867419.
5	955781	2	Nut		EXCL MD7 SPEC 867417, 867418, 867419.
6	955948	2	Lock washer		EXCL MD7 SPEC 867417, 867418, 867419.
7	833133	1	Cube		EXCL MD7 SPEC 867417, 867418, 867419.
8	192244	1	Screw		EXCL MD7 SPEC 867417, 867418, 867419.
9	955892	2	Washer		EXCL MD7 SPEC 867417, 867418, 867419.
10	907824	1	Cotter pin		EXCL MD7 SPEC 867417, 867418, 867419.. EXCL MD7A/COMBI.
11	819067	1	Brace		EXCL MD7 SPEC 867417, 867418, 867419.. EXCL MD7A/COMBI.
12	956074	2	Screw		EXCL MD7 SPEC 867417, 867418, 867419.. EXCL MD7A/COMBI.
13	804312	1	Cube		EXCL MD7 SPEC 867417, 867418, 867419.. EXCL MD7A/COMBI.
14	955892	1	Washer		EXCL MD7 SPEC 867417, 867418, 867419.. EXCL MD7A/COMBI.
15	907824	1	Cotter pin		EXCL MD7 SPEC 867417, 867418, 867419.. EXCL MD7A/COMBI.
29	818470	1	Control cable		L = 6900 MM
	818478	1	Control		L = 3300 MM
30	955857	2	· Nut		
31	955950	2	· Lock washer		
32	955844	1	· Nut		
33	829241	1	· Handle		
34	829070	1	Cable lock		EXCL MD7 SPEC 867417, 867418, 867419.
35	950363	1	Nut		EXCL MD7 SPEC 867417, 867418, 867419.
36	955894	2	Washer		EXCL MD7 SPEC 867417, 867418, 867419.
43		X	CONTROL		SEE GROUP 9. EXCL MD7A/COMBI.
44		X	CONTROL CABLE		SEE GROUP 9. EXCL MD7A/COMBI.