PROPELLER SHAFT STUFFING BOX: 828422

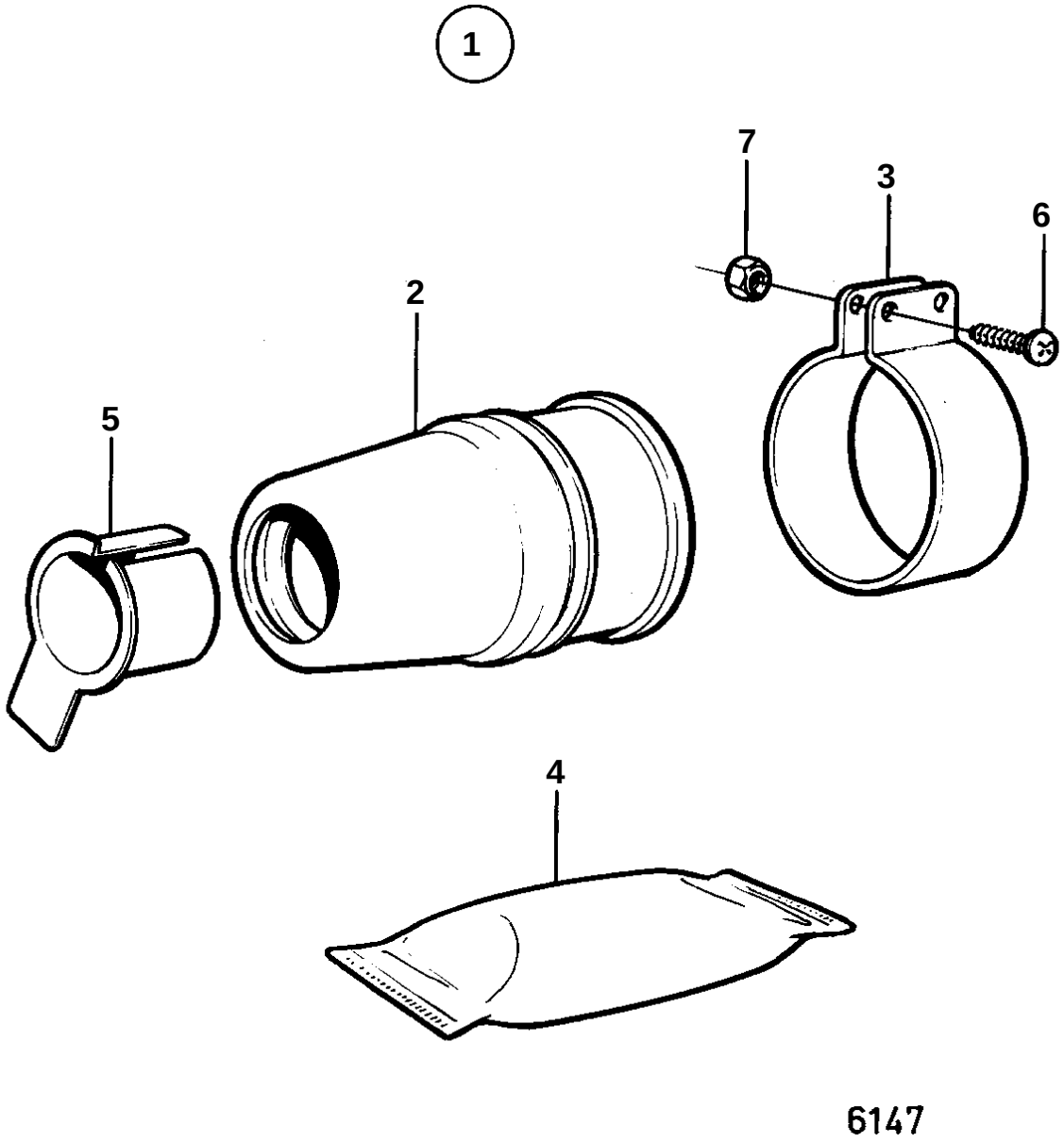

REF	PART NO.	QTY	DESCRIPTION		SEE SEC.	NOTES
1	828422	1	Seal			D = 30 MM
			Bulletin P-44-6-1		P-44-6-1-EN	Rubber Stuffing Box
2		1	· STUFFING BOX			
3	828418	1	· Clamp			
4	828250	1	· Grease			
5		1	· UNIVERSAL SLEEVE			
6	949418	2				
7	966170	2	· Nut			