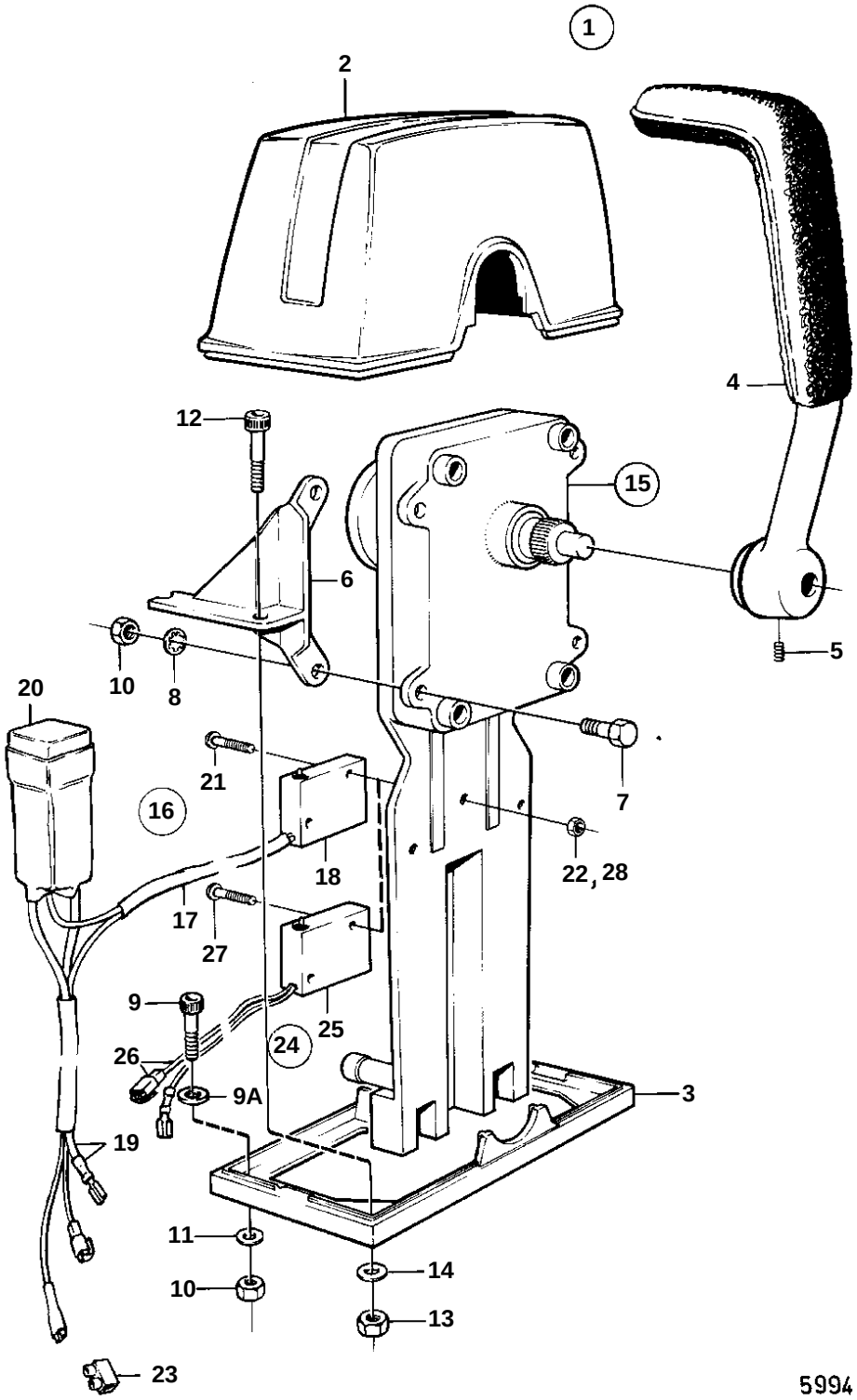
1
2
4
12
15
6
5
10
8
20
21
7
16
18
22, 28
17
27
9
25
24
26
9A
3
19
11
14
10
13
23
5994

REF	PART NO.	QTY	DESCRIPTION		NOTES
1	851603	1	Mounting kit		LATE TYPE. FOR TWIN INSTALLATION
2	839477	1	· Cover	IK	
3	839479	1	· Plate	IK	
4	839475	2	· Lever	IK	
5	839693	2	· Lock screw	IK	M8
9	947671	6	· Allen head screw	IK	
9A	940090	2	· Washer	IK	
10	955780	6	· Nut	IK	
11	960138	6	· Washer	IK	
15	851600	2	Control		LATE TYPE
			COMPONENTS		
16	839641	2	Neutral posit contac		
17	839619	2	· Cable kit		
18	850200	2	· · Switch		
19		X	· · CABLES AND TERMINALS		SEE GROUP 3
20	1501832	2	· Relay		
21	946177	4	· Screw		
22	947536	4	· Nut		
23	182009	2	· Coupling piece		
24	828414	2	Neutral posit contac		MAIN STATION.
	838378	2	Governor		SECOND STATION.
25	850200	2	· Switch		
26		X	· · CABLES AND TERMINALS		SEE GROUP 3
27	946177	4	· Screw		
28	947536	4	· Nut		