FUEL INJECTION PUMP: 838372

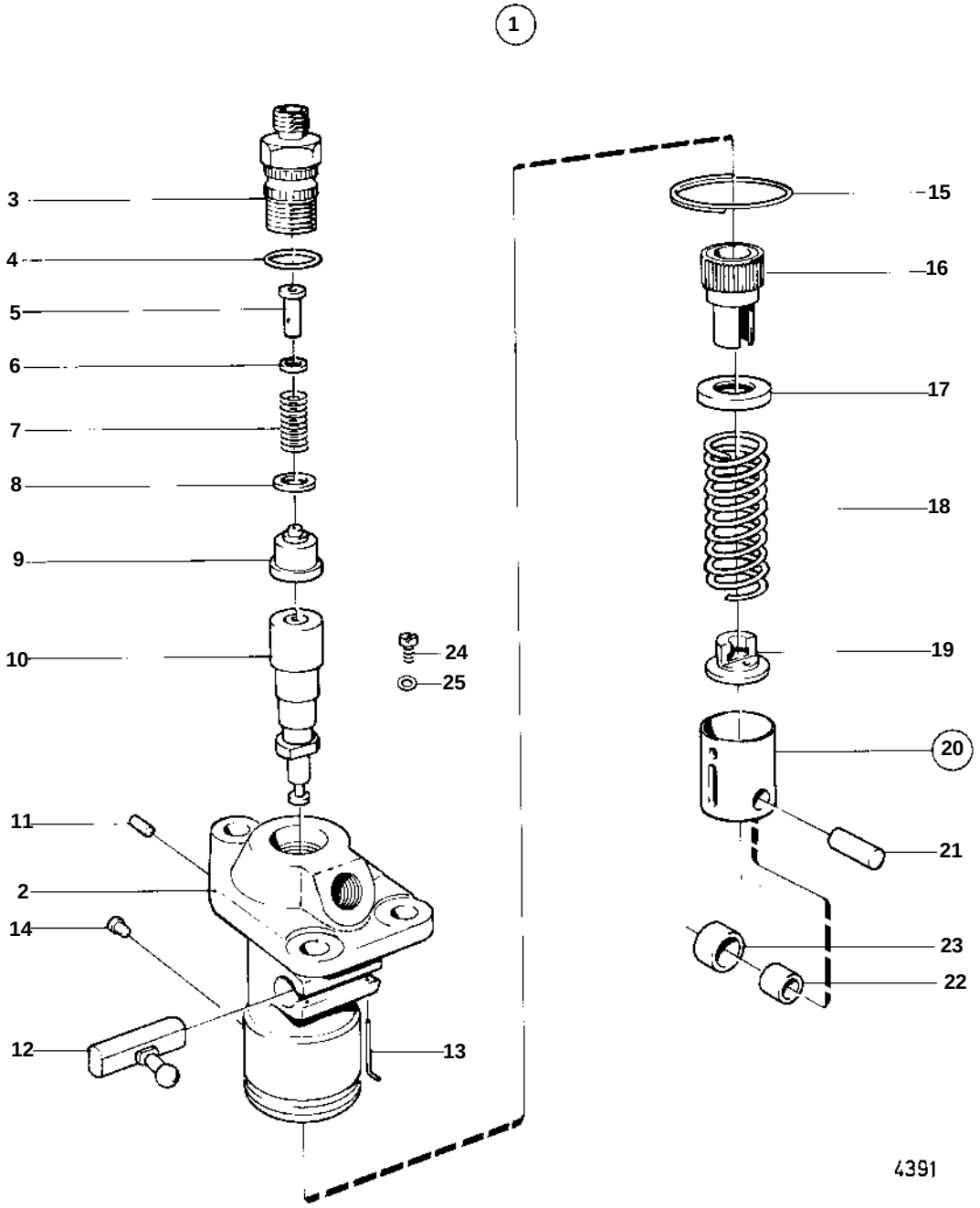

REF	PART NO.	QTY	DESCRIPTION		NOTES
1	838372	1	Injection pump		
2		1	· HOUSING		
3	243420	1	· Retainer		
5	870576	1	· Plug		
6	238314	X	· Adjusting washer		TH = 1,0 MM
7	238309	1	· Spring		
9	838237	1	· Valve		
11	243409	1	· Gasket		
	243410	1	· Adjusting washer		