MD5

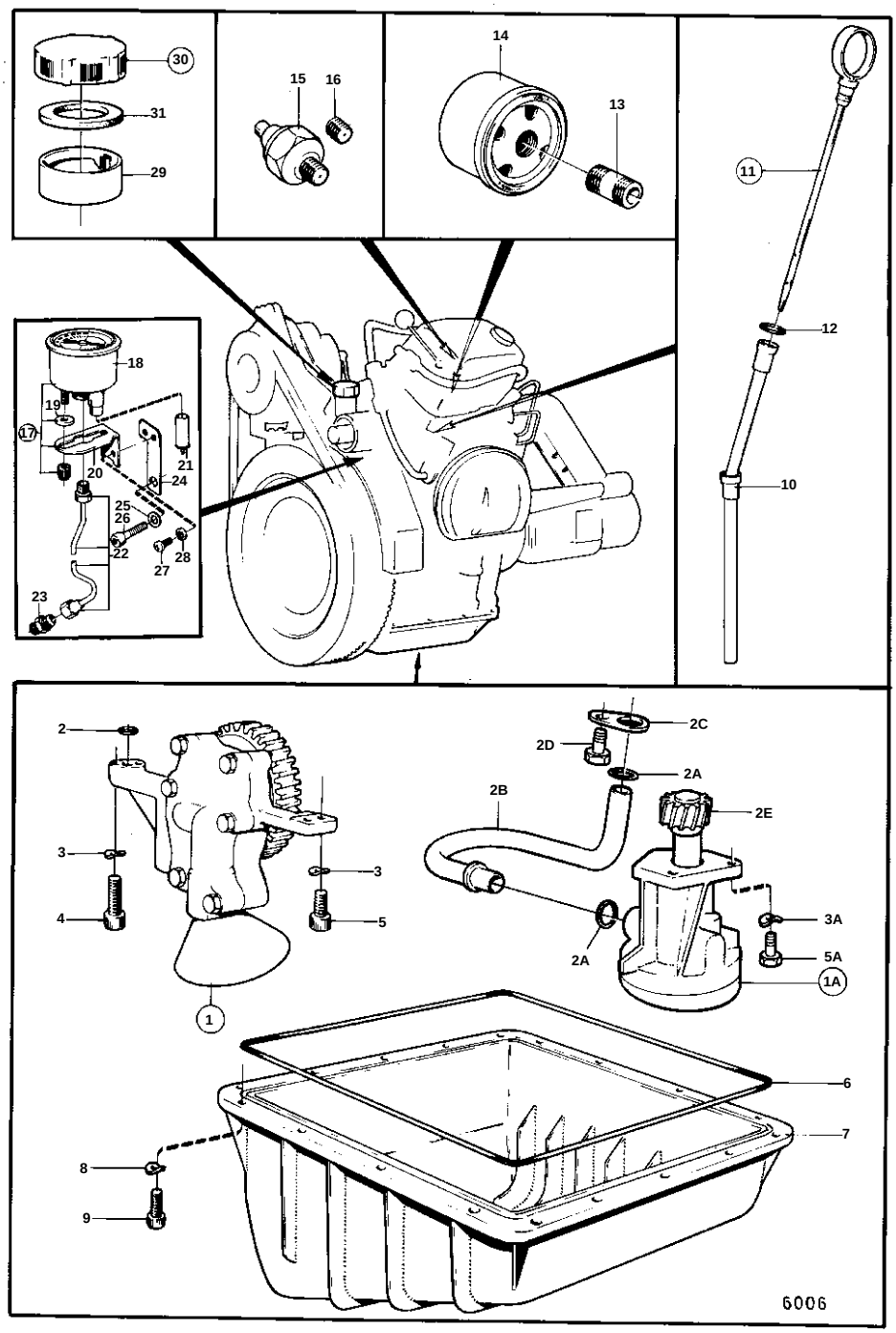
30
31
29
15
16
14
13
11
12
10
18
19
17
20
21
24
25
26
22
27
28
23
2
2C
2D
2A
2B
2E
3
3
4
5
3A
2A
5A
1A
1
6
7
8
9
6006

MD5

REF	PART NO.	QTY	DESCRIPTION		SEE SEC.	NOTES
1A	838359	1	Oil pump			
					02A-2160	
2A	829714	2	Seal	IK		
2B	838368	1	Oil pipe			
2C	838389	1	Flange			
2D	942000	1	Screw			
2E	838358	1	Gear			
3A	941907	2	Spring washer			
5A	955297	2	Screw			L = 25 MM, MO-30016
	955295	2	Screw			L = 20 MM, MO 30017-
6	838235	1	Gasket	IK		
7	838129	1	Oil pan			
8	941906	18	Spring washer			
9	942001	18	Screw			
10	838251	1	Tube		02A-0550	
11	838253	1	Oil dipstick			
12	949187	1	・ O-ring	IK		(955972)
13	418440	1	Nipple		02A-0550	
14	834337	1	Oil filter			
15	807078	1	Pressure monitor			SEE GROUP 3
29	3848300	1	Filler pipe		02A-0550	
30	3848303	1	Cover			
31	840072	1	・ Gasket			