MD5

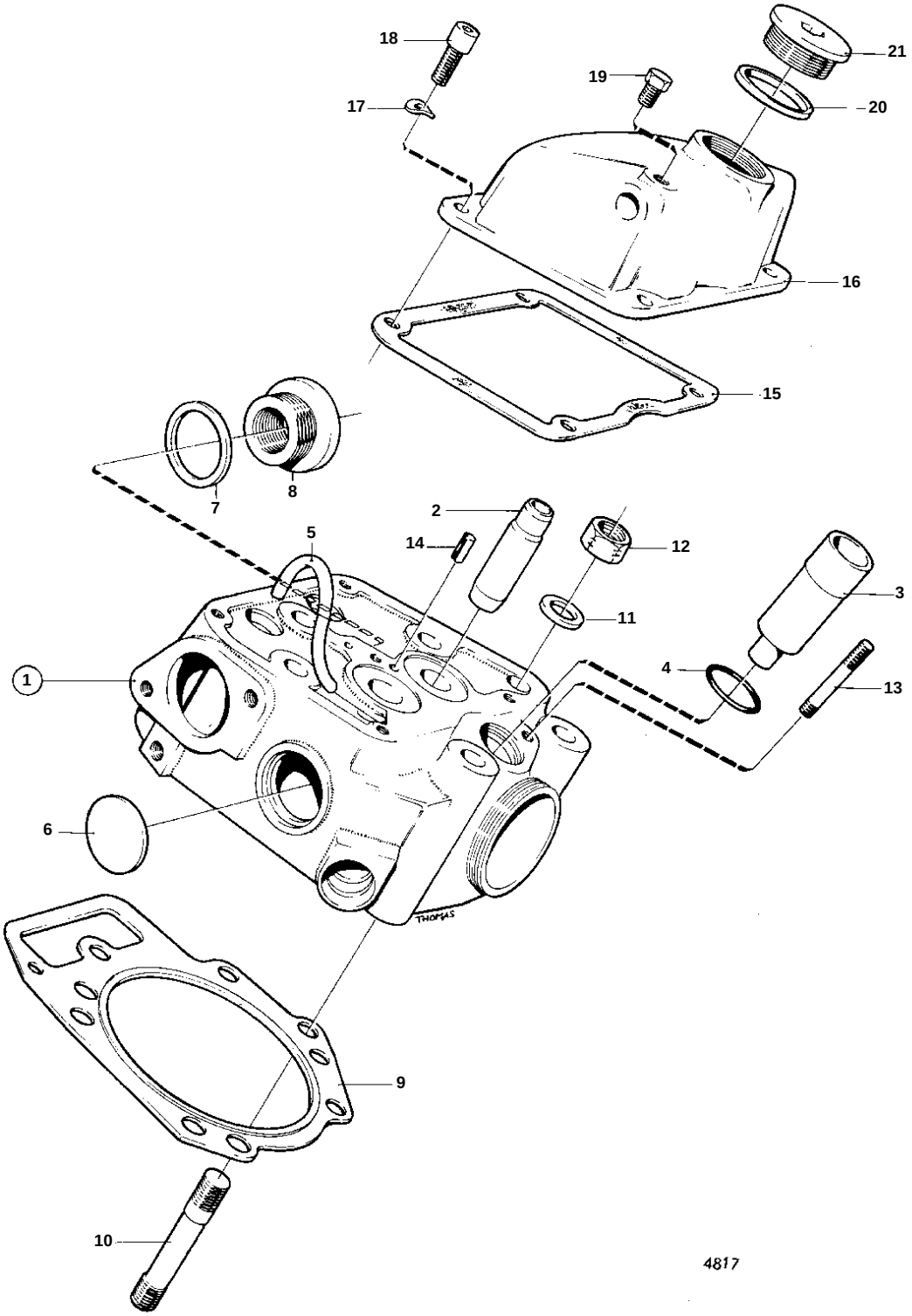

MD5

REF	PART NO.	QTY	DESCRIPTION		SEE SEC.	NOTES
1	838365	1	Cylinder head			
2	829867	2	· Guide sleeve		02A-1350	
3	838061	1	· Spray sleeve			
4	945221	1	· O-ring	IK		
5	838172	1	· Tube			
6	834207	1	· Plug			
7	957191	1	· Gasket	IK		
8	838124	1	· Plug			
9	838127	1	Gasket	IK		
10	838065	5	Stud		02A-0550	
11	840210	5	Washer			
12	463643	5	Nut			
13	838067	2	Stud			SEE GROUP 2C
14	951961	1	Spring pin		02A-1350	
15	838066	1	Gasket	IK		
16	838200	1	Valve cover			
17	941906	4	Spring washer			
18	942001	4	Screw			