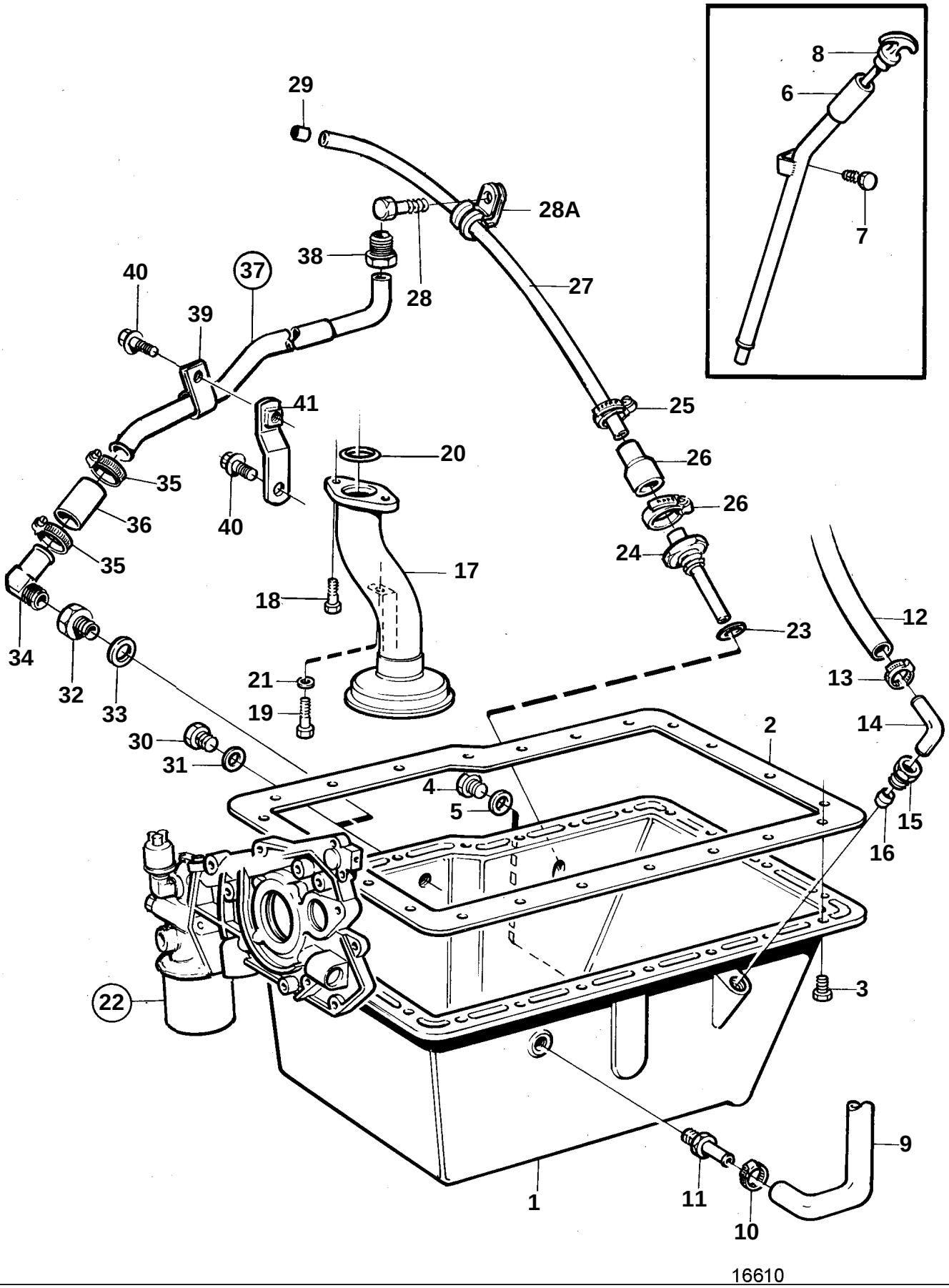
8
6
7
29
28A
38
28
27
40
37
39
41
25
20
26
35
36
40
26
24
35
17
18
12
23
34
32
33
21
19
13
14
30
31
2
4
5
15
16
22
3
9
1
11
10
16610

REF	PART NO.	QTY	DESCRIPTION		SEE SEC.	NOTES
1	859724	1	Oil pan			
2	861603	1	Gasket			
3	946934	16	Flange screw			L=20mm
	948356	1	Screw			L=30mm
	965212	1	Screw			L=35mm
4	859725	1	Plug			
5	483963	1	Washer			
6	859733	1	Tube			
7	946440	1	Flange screw			
8	859734	1	Oil dipstick			
9	859739	1	Hose			Oil filling-oil pan.
10	961665	1	Hose clamp			
11	859751	1	Connector			
12	861604	1	Hose			Oil filling-oil pan.
13	961665	1	Hose clamp			
14	859740	1	Tube			
15	859741	1	Nut			
16	6613372	1	Fitting			
17	859728	1	Strainer			
18	946934	2	Flange screw			
19	967949	1	Screw			(965175)
20	859732	1	O-ring			
21	976945	1	Washer			
22		1	Oil pump		2860	
23	957185	1	Gasket			
24	860014	1	Tube			
25	961665	2	Hose clamp			
26	843533	1	Rubber hose			
27	861124	1	Tube			
28	946471	1	Screw			
28A	949746	1	Clamp			
29	943835	1	Plug			
30	859727	1	Plug			
31	957185	1	Gasket			