MD2020B

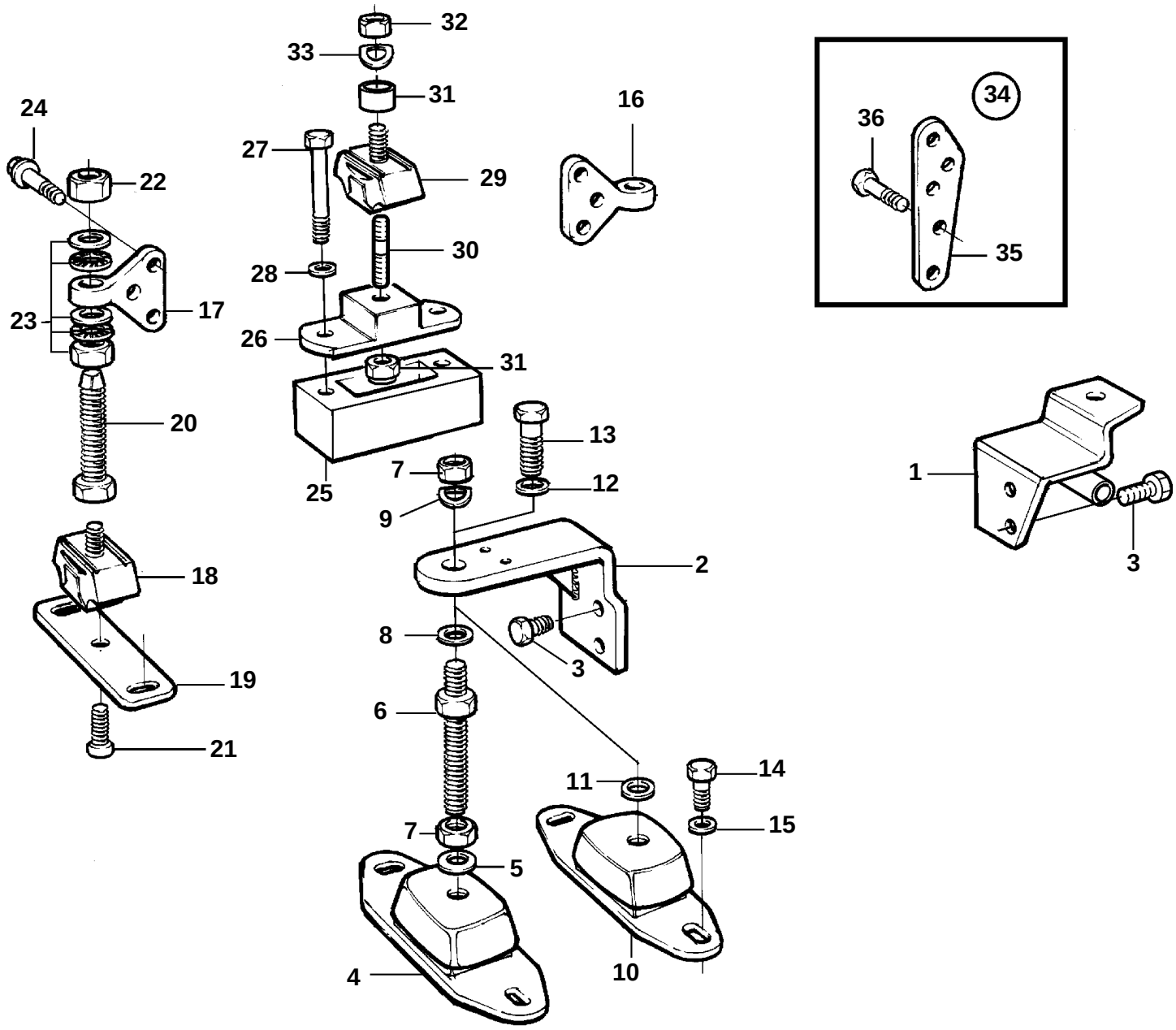

17693

MD2020B

REF	PART NO.	QTY	DESCRIPTION		NOTES
1	3580271	1	Engine bracket, front		P
2	3580114	1	Engine bracket, front		S.B
3	3580115	4	Screw		
4	861460	2	Rubber element		
5	955900	2	Washer		
6	861431	2	Adjuster screw		
7	955821	4	Nut		
8	955900	2	Washer		
9	941912	2	Spring washer		
16	860343	2	Engine bracket, rear		P
17	860344	2	Engine bracket, rear		S.B
18	838262	2	Rubber element		
19	838263	2	Attaching plate		
20	838264	2	Adjuster screw		
21	949149	2	Screw		
22	955806	4	Nut		
23	829893	8	Lock washer		
24	965185	6	Flange screw		
34	858566	1	Bracket kit		For deep engine installation.
35	858550	1	· Anchorage, rear		P. For deep engine installation.
	858551	1	· Anchorage, rear		S.B. For deep engine installation.
36	970948	4	· Screw		L=30mm
	970950	4	· Screw		L=40mm
	970954	2	· Screw		L=60mm