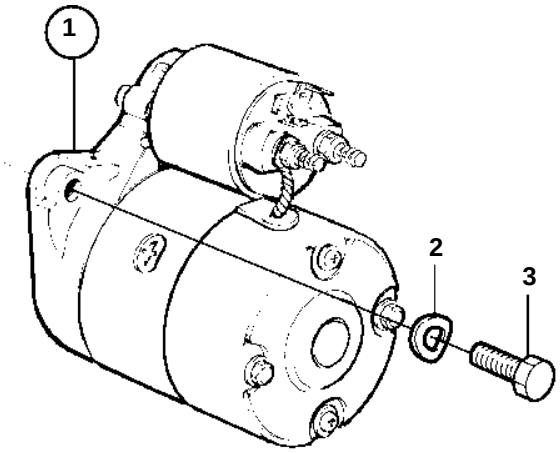

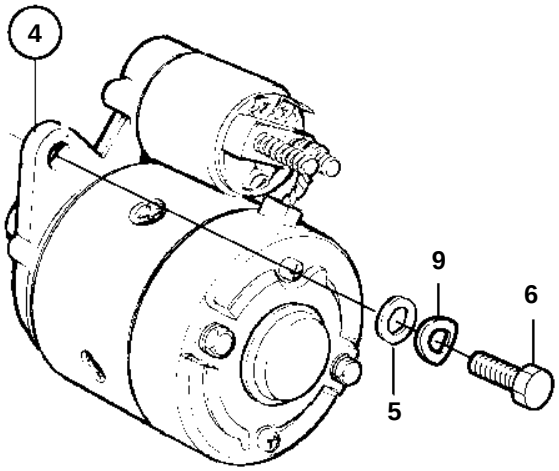

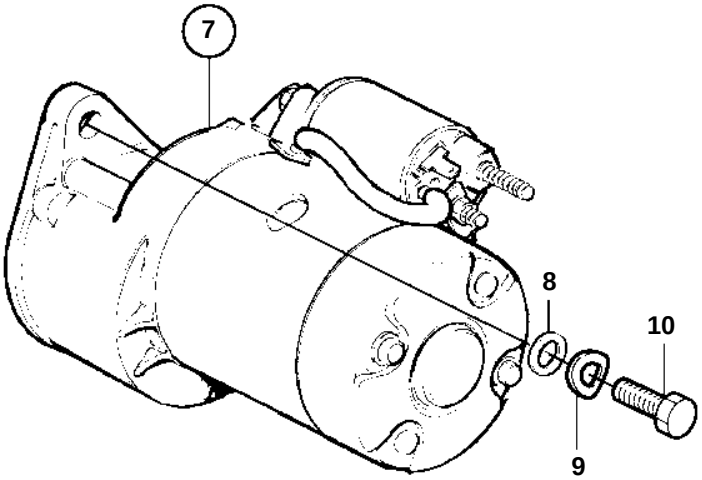

17676

REF	PART NO.	QTY	DESCRIPTION		SEE SEC.	NOTES
7	3580472	1	Starter motor			REPL BY 3581727
					257	
	3581727	1	Starter motor			
	3803439	1	Starter motor, exch			Exchange unit
			Comps. not spec.			
8	3580031	2	Washer			
9	3580015	2	Spring washer			
10	3580109	2	Screw			