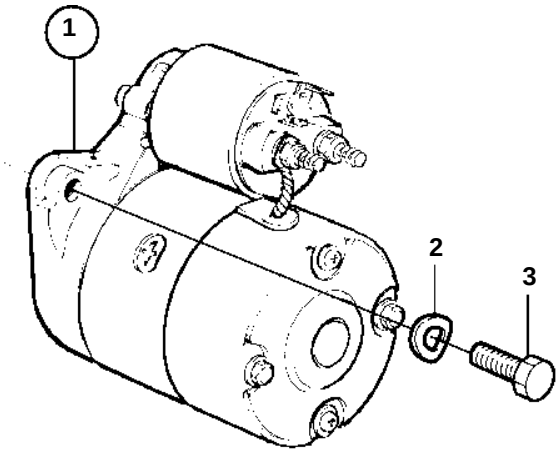

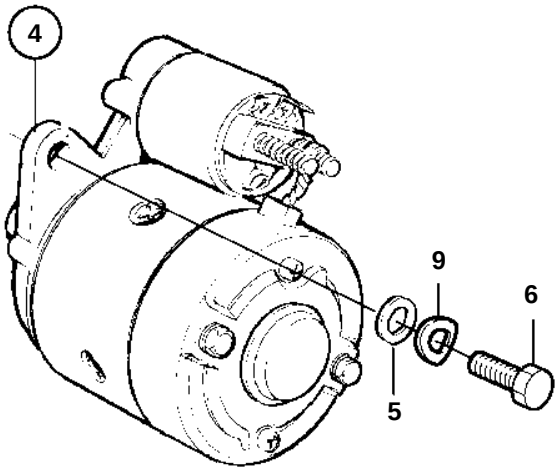

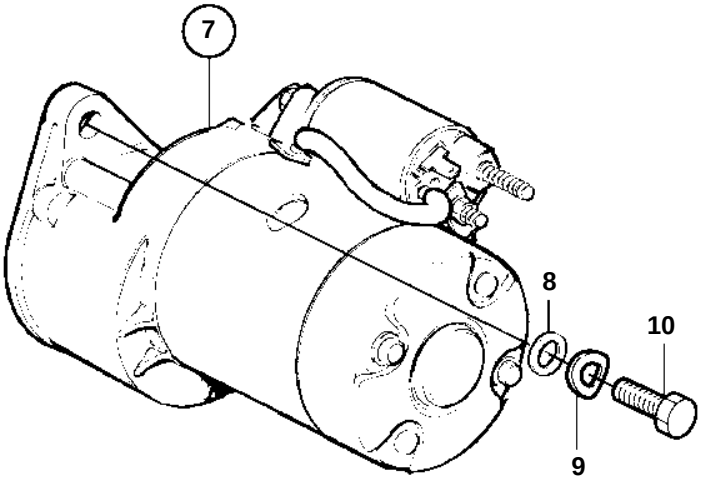

17676

REF	PART NO.	QTY	DESCRIPTION		SEE SEC.
4	3580295	1	Starter motor		
					256
5	3580108	2	Washer		
6	3580296	2	Screw		