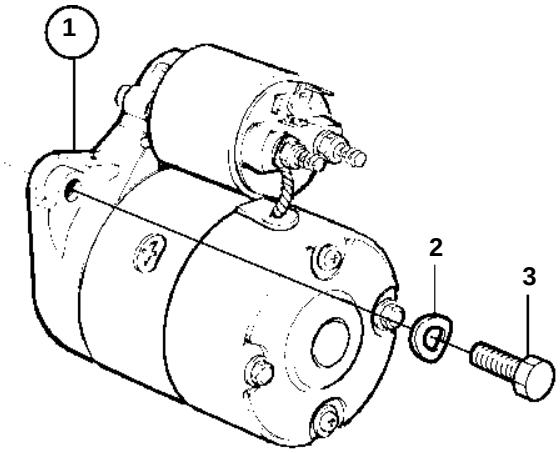

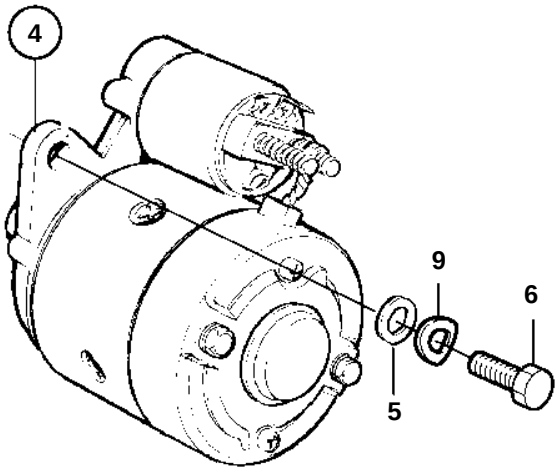

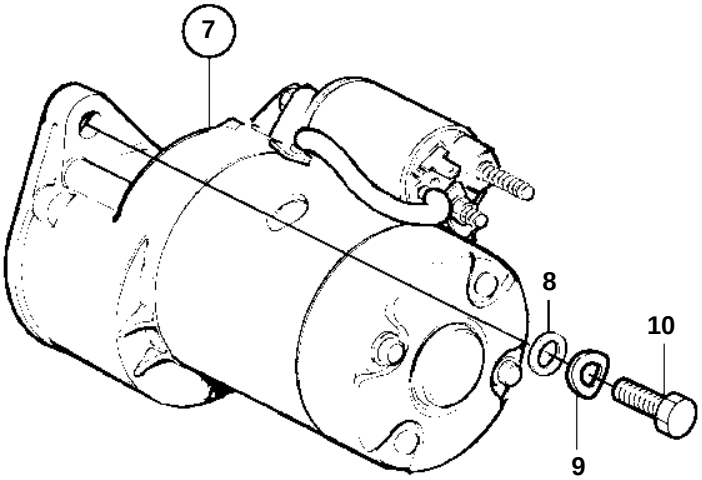

17676

REF	PART NO.	QTY	DESCRIPTION		SEE SEC.	NOTES
1	861845	1	Starter motor			
	3803437	1	Starter motor, exch			Exchange unit
					199	
2	861847	2	Spring washer			
3	861846	2	Screw			