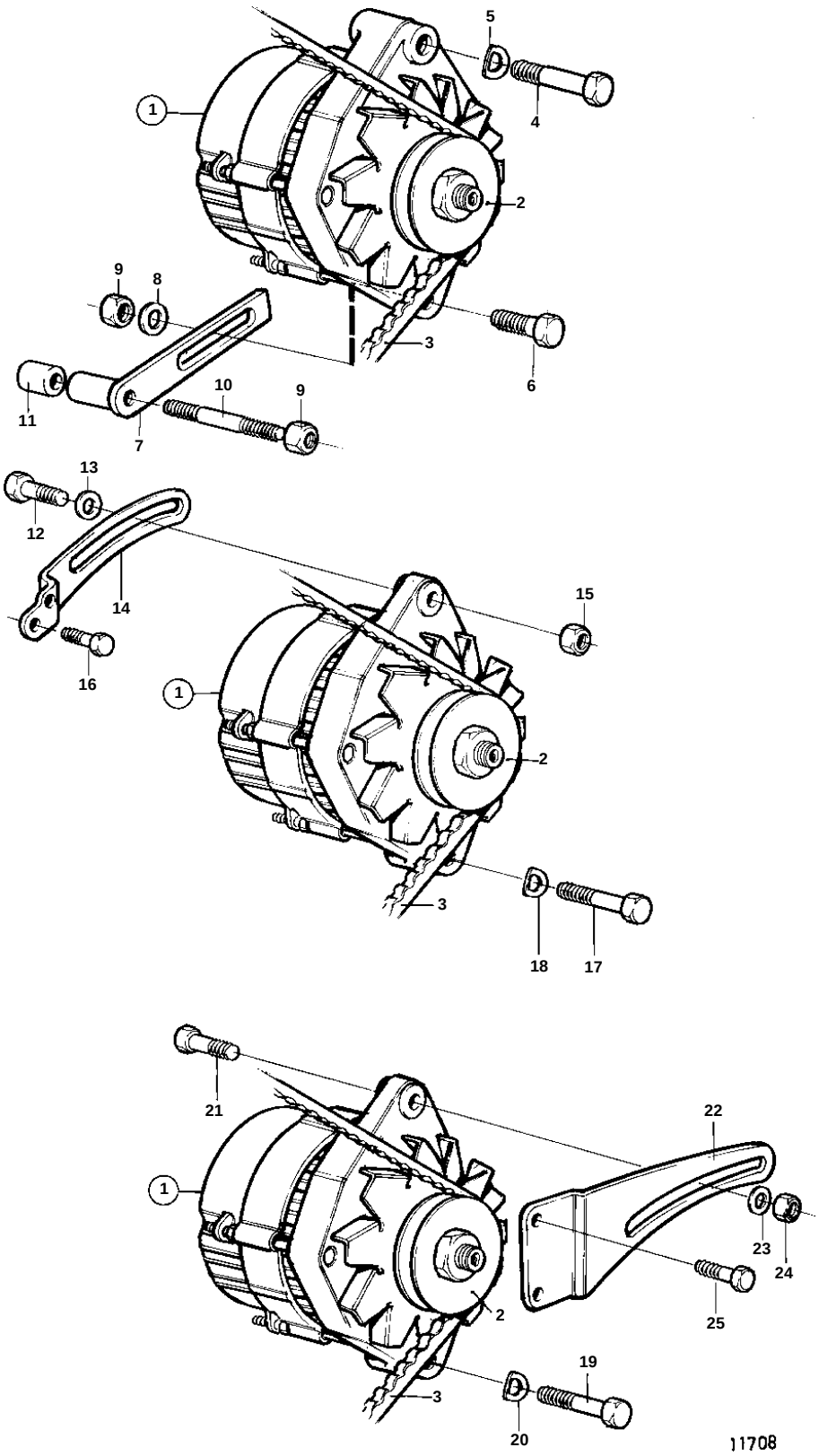
5
1
4
2
9
8
3
6
10
9
11
7
13
12
14
15
16
1
2
3
18
17
21
22
1
23
24
2
25
19
3
20
11708

REF	PART NO.	QTY	DESCRIPTION		SEE SEC.	NOTES
1	872235	1	Alternator			14V 60A
	3803260	1	Alternator,exch			Exchange unit
					448	
2	873343	1	Pulley			STD
3	973534	1	V-belt			
4	3580014	1	Screw			
5	3580015	1	Spring washer			
6	3580018	1	Screw			
7	3580016	1	Tensioner			
8	3580019	1	Washer			
9	945408	2	Flange nut			
10	3580021	1	Stud			MD2010B
	3580259	1	Stud			MD2020B
11	3580017	1	Sleeve			MD2010B