MD2010C, MD2010D, MD2020C, MD2020D, MD2030C, MD2030D, MD2040C, MD2040D

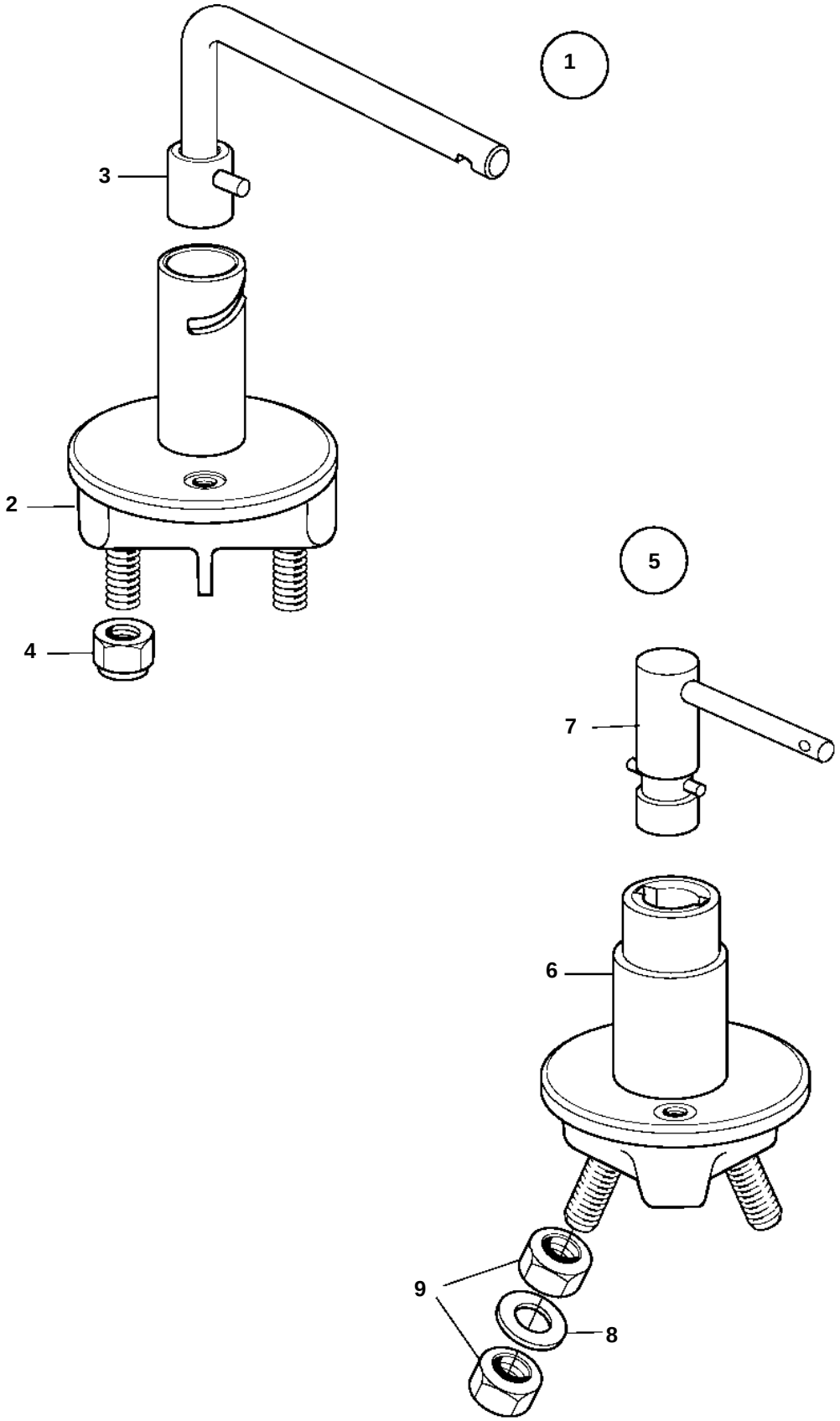

18584

MD2010C, MD2010D, MD2020C, MD2020D, MD2030C, MD2030D, MD2040C, MD2040D

REF	PART NO.	QTY	DESCRIPTION		NOTES
1	870980	1	Switch		REPLACED BY 1140319
2		1	· Switch		
3	243700	1	· Handle		REPLACED BY 1140319
4	971071	2	· Nut		(955783)
5	1140319	1	Battery main switch		
6		1	· Switch		
7	1140427	1	· Knob		
8	1140428	2	· Washer		
9	17602	4	· Nut		